GIBBS quadski XL

WARNING! Please read this manual as it contains important safety and operating information.

Never allow anyone under 16 years old to ride this amphibian.

Owner's Manual

GIBBS quadski XL

Owner's Manual

© 2014 Gibbs Sports Amphibians Inc.

All rights reserved. Information contained in this document is based on the latest information available at the time of printing and is subject to the copyright and other intellectual property rights of Gibbs Sports Amphibians Inc. No part of this document may be reproduced, stored in a retrieval system, or transmitted in any form or by any means, electronic, mechanical, photocopying, recording, or otherwise. These materials must not be modified or reposted to other sites, without the prior expressed written permission of the copyright holder.

Preface

Welcome to our Amphibious Family

At Gibbs Sports Amphibians Inc (GIBBS), we strive to provide the world's best High Speed Amphibians (HSAs) for recreational and first-responder use. A HSA is defined as a motor vehicle able to travel under its own power on both land and water at a speed of 15 mph (24 km/h) or more with the transition between land and water taking only a few seconds. We've invested years of hard work and research to create a new product that offers you award-winning engineering, design and development of an amphibian.

Our dedication to innovation and manufacturing related to HSA technology provides an incomparable high-performance machine for consumer freedom and adventure.

Before using your Quadski (referred to as the amphibian in this Owner's Manual), please take the time to get acquainted with your multi-use personal sports amphibian. There is no other product on the market like it today, so it's important to protect yourself and your investment by following the instructions and recommendations outlined in this Owner's Manual.

We recommend that you read this Owner's Manual before you operate your Quadski. This Manual is full of facts and a detailed list of topics that will give you an understanding of how to take care of and safely ride a Quadski either on your own or with a passenger.

In order to maintain your Quadski, we urge you to take responsibility for performing all pre-ride inspections and other periodic checks outlined in this Manual. This Manual contains instructions for minor maintenance. However, it is imperative that any major service, maintenance and warranty items related to your amphibian be performed at a GIBBS certified facility or your point of sale dealership.

The Owner's Manual should be considered a permanent part of your amphibian and should remain with the Quadski at all times (even when sold). Please make sure to report any change of address or ownership to GIBBS. This will allow GIBBS to contact the current owner concerning important product information and updates. Because GIBBS strives to produce and manufacture only high quality products, some amphibians may not be the exact design as described in this Owner's Manual. Specifications are subject to change without notice.

At GIBBS, we've taken great strides to insure that you receive one of the first HSA technology products that provides ultimate flexibility between land and water. While operating your Quadski it is essential to always wear required safety equipment, stay on prepared trails and respect all marine and wild life.

Thank you for choosing to be a part of the GIBBS family; gear up and prepare for a redefined land and water experience.

If you have any questions about safety equipment, operation or maintenance of your amphibian, please contact a GIBBS authorized dealer or visit our website at: www.gibbssports.com.

Wherever Adventure takes you, Think Safe and Ride Responsibly

GIBBS

INTRODUCTION

About This Owner's Manual 3

OPERATION

Rider Qualifications

Operator Training..... 4
Operator Age and Ability 4
Passenger Safety..... 4
No Alcohol or Drugs 5
No More than One Passenger 5

Important Safety Information

Avoid Carbon Monoxide (CO) Poisoning..... 6
Accessories and Modifications..... 6
California Proposition 65 6

Safety Labels

Warning Labels Affixed to the Amphibian ... 7

Fueling

Fuel Safety..... 12
Fuel Specification 12
Fueling Procedure 13

Controls

Overview..... 14
Steering 15
Ignition Switch 15
Starting the Engine 16
Engine Stop/Cut-off..... 17
Throttle Lever..... 17
Selecting a Gear 18
Braking (Land Mode Only)..... 19
Parking Brake (Land Mode only) 20
Instrument Cluster 21
Suspension Retract/Deploy Switch..... 23
Headlights..... 24

Equipment

Front Storage Compartment 25
Rear Storage Compartment 25
Fire Extinguisher 25
Flag Mount..... 26
Front Eyelet..... 26

New Amphibian Break-In

New Amphibian Break-In..... 27

Planning a Safe Trip

Plan Your Trip 28
Trips On Water..... 28
Trips On Land 28
What to Wear and Bring 29
Operating in Cold Weather 31
Operating with a Passenger..... 31
Cargo and Load Limits 32

Pre-ride Inspection

Pre-ride Inspection 33

Safe Operation on Land

Riding Locations and Surfaces..... 36
Speed..... 38
Operator Position..... 38
Passenger Position 38
Braking..... 38
Turning..... 39
Slopes 39
Obstacles and Rough Terrain 41
Reverse Operation 42
No Stunts 42
No Towing Other Vehicles 42
Parking..... 42
Recovering the Amphibian on Land 43

Entering And Exiting The Water

Choosing Water Entry and Exit Sites..... 44
Entering the Water 45
Exiting the Water..... 46

Safe Operation on Water

Important 47
Learn About On-water Safety and Waterway Rules 47
Avoid Hazards While Engine is Running.... 47
Operator Position..... 47
Passenger Position 47
Turning..... 48
Marine Enhanced Steering..... 49
Stopping 49
Avoiding a Collision 49
Reverse Operation 50
Water conditions..... 50
Crossing Waves and Wakes 50
Shallow water 50
Boarding the Amphibian in Deep Water 51

No Offshore Operation 51
No Nighttime Operation 51
No Anchoring 51
No Towing 51
Practice Exercises 52
Mooring/Docking 53
Beaching 54
Recovering the Amphibian on Water 54
Righting a Capsized Amphibian 55
Navigation Rules 56

After Your Ride
Post-operation 58

MAINTENANCE

Maintenance Requirements
General Information 59
Scheduled Servicing 59
Owner Maintenance 59
Maintenance Safety 60
Fuel and Emission Systems Components 60
Maintenance Schedule 61

Owner Maintenance
Component Locations 62
Air Filter 63
Engine Oil 65
Engine Coolant 66
Brake Fluid 67
Seat 68
Upper Body Panel 69
Spark Plugs 70
Exhaust Spark Arrestor 71
Battery 73
Fuses 75
Water Intake and Jet Impeller Cleaning 77
Hull Drain Plugs 77
Wheels and Tires 78
Cleaning 79
Storage 80
Removing Raw Water From The Quadski .. 81
Transporting 82

SPECIFICATIONS

Identification Numbers
Amphibian Identification Numbers 83
Engine Identification Number (EIN) 83
Emissions Control Information 84

Technical Data
Dimensions - On Land 85
Dimensions - On Water 86
Engine 87
Engine Management System 87
Transmission 88
Jet Thrust Drive 88
Electrical 88
Wheels and Tires 89
Weights 89

Fluids And Capacities
Approved Fluids and Capacities 90

INDEX

About This Owner's Manual

This Owner's Manual contains a great deal of information about your amphibian. We advise you to read it carefully and then familiarize yourself and your passengers with the controls before riding.

For your own safety, follow the instructions and warnings contained in this Manual. Ignoring them could result in damage to the amphibian or personal injury to you or others. Damage caused by failure to follow instructions is not covered by the Limited Warranty.

This Manual is printed on waterproof paper so that it can be stored in the front storage box of the amphibian and be available for reference if required. Should you resell your amphibian, remember to pass on this Manual to the next owner.

Signal words and symbols used in this manual

The following signal words and symbols are used in this Manual to designate safety messages and other important information.

WARNING! Indicates a hazardous situation which, if not avoided, could result in serious injury or death.

CAUTION! Indicates a hazardous situation which, if not avoided, could result in minor or moderate injury.

NOTICE Used to address practices or situations not related to physical injury, or to prevent possible damage to the amphibian.

This symbol identifies instructions that should be observed in order to minimize damage to the environment.

Status at time of printing

All specifications and descriptions are accurate at the time of printing. Gibbs Sports Amphibians Inc operates a policy of continuous product development and improvement and reserves the right to change specifications without notice.

Copyright © 2014 Gibbs Sports Amphibians Inc.

No part of this publication may be reproduced, stored in a data processing or retrieval system, or transmitted in any form by electronic, mechanical or other means, or recorded, translated, expanded, edited or abridged without the prior written permission of the copyright holder.

Operator Training

WARNING! The amphibian is not a toy and can be hazardous to operate. Disregarding any of the safety precautions and instructions contained in this Owner's Manual or on the safety labels attached to the amphibian could cause injury including the possibility of death!

Please read this Owner's Manual and familiarize yourself with the amphibian before operating. This manual has sections regarding:

- *Planning a Safe Trip, page 28*
- *Pre-ride Inspection, page 33*
- *Safe Operation on Land, page 36*
- *Entering And Exiting The Water, page 44*
- *Safe Operation on Water, page 47*

Observe the instructions on all safety labels. They are there to help you safely enjoy the use of your amphibian.

The handling characteristics and performance of the amphibian on land and water may be different than other ATVs and watercraft you have used. Please take the time to practice maneuvers in a safe environment even if you consider yourself as an experienced rider.

Never use the amphibian unless you have received proper training or instruction. Gibbs Sports Amphibians Inc highly recommends that you take an ATV rider safety course and a safe boating course. Please check with a Gibbs Sports Amphibians dealer or local authorities for availability in your area. Call 1-800-887-2887 to find out about an ATV training course near to you. To find a safe boating course near you, visit: www.uscgboating.org/

In certain areas, an operator competency card is mandatory to operate the amphibian on water. Completion of an ATV rider safety course is also mandatory before operation in some areas.

Ensure that you are familiar with local and federal laws and regulations concerning the off-road riding areas and waterways that you are intending to use.

Operator Age and Ability

Never allow anyone under the age of 16 to operate the amphibian.

Laws regarding the minimum age and licensing requirements of operators may vary from one area to another. Be sure to contact the local authorities for information regarding the legal operation of the amphibian for your area.

Do not allow a person to operate the amphibian if they have an impairment that may prevent them operating it safely (for example, impaired judgment, vision, reaction time or the ability to operate the controls). This includes temporary impairments such as fatigue.

Only attempt maneuvers and ride in situations that are suitable for your level (and your passenger's level) of riding ability and experience. Maneuvers or situations that are too challenging increase the risk of an accident.

Passenger Safety

Be sure your passenger can securely grasp the hand holds and plant their feet firmly on the footrests while seated in the passenger seat.

Do not allow a passenger to ride the amphibian if they have an impairment that may prevent them riding it safely.

Instruct your Passenger

Before anyone rides as a passenger, be sure they are familiar with all the safety information in this manual that may be relevant to your ride. Make sure your passenger reads and understands the safety labels that may be relevant to your ride.

Before starting out, instruct your passenger to always stay in the correct riding position, firmly holding on, and be prepared to lean, shift weight, and brace for acceleration, deceleration, and turning forces. Tell them to pay attention to upcoming conditions and be prepared for changes in terrain and water conditions. Ask the passenger to tell you if they feel uncomfortable.

Show your passenger where the fire extinguisher and any other lifesaving equipment is stored and make sure they know how to use it.

No Alcohol or Drugs

Never operate your amphibian or allow a passenger to ride under the influence of alcohol or drugs, including medications that affect your ability to operate motor vehicles.

Operating or riding the amphibian requires the rider to be sober, attentive and alert. Riding the amphibian while intoxicated or under the influence of drugs is not only dangerous, but also illegal.

The use of drugs and alcohol decreases reaction time, impedes judgment, impairs vision, affects balance and perception which could inhibit your ability to safely ride the amphibian.

No More than One Passenger

Never carry more than one passenger. The amphibian is designed for use by the operator alone or with one passenger.

The additional weight of a second passenger will affect the amphibian's stability and maneuverability which will increase the chance of you losing control.

Avoid Carbon Monoxide (CO) Poisoning

Engine exhaust fumes contain carbon monoxide, a deadly gas. Breathing carbon monoxide can cause headaches, dizziness, drowsiness, nausea, confusion and eventually death.

Carbon monoxide is a colorless, odorless, tasteless gas that may be present even if you do not see or smell any engine exhaust. Deadly levels of carbon monoxide can collect rapidly, and you can quickly be overcome and unable to save yourself. Also, deadly levels of carbon monoxide can linger for hours or days in enclosed or poorly ventilated areas. If you experience any symptoms of carbon monoxide poisoning, leave the area immediately, get fresh air and seek medical treatment.

To prevent serious injury or death from carbon monoxide:

- Never run the vehicle in poorly ventilated or partially enclosed areas such as garages, carports or barns. Even if you try to ventilate engine exhaust fumes with fans or open windows and doors, carbon monoxide can rapidly reach dangerous levels.
- Never run the vehicle outdoors where engine exhaust fumes can be drawn into a nearby building through openings such as windows and doors.
- Never stand behind the amphibian while the engine is running. A person standing behind a running amphibian may inhale high concentrations of exhaust fumes.

Accessories and Modifications

The installation of non-approved parts and accessories, or any non-approved modification to your amphibian, may be dangerous and could affect the handling of the amphibian and the safety of the rider. It may also invalidate the terms and conditions of the Limited Warranty.

It is extremely hazardous to fit parts or accessories where installation requires the dismantling of, or addition to, either the electrical or fuel systems.

Consult a Gibbs Sports Amphibians dealer before installing any parts or accessories and before making any modification to the amphibian.

California Proposition 65

WARNING! Certain components used in the amphibian contain or emit chemicals known to the State of California to cause cancer and birth defects or other reproductive harm. In addition, certain fluids contained in the amphibian and certain products of component wear contain or emit chemicals known to the State of California to cause cancer and birth defects or other reproductive harm.

Warning Labels Affixed to the Amphibian

The following illustration show the locations of all the safety labels located on your amphibian. Read all safety labels before operating and always observe all instructions on the labels. If any label is missing or damaged, please contact a Gibbs Sports Amphibians dealer to have the label replaced.

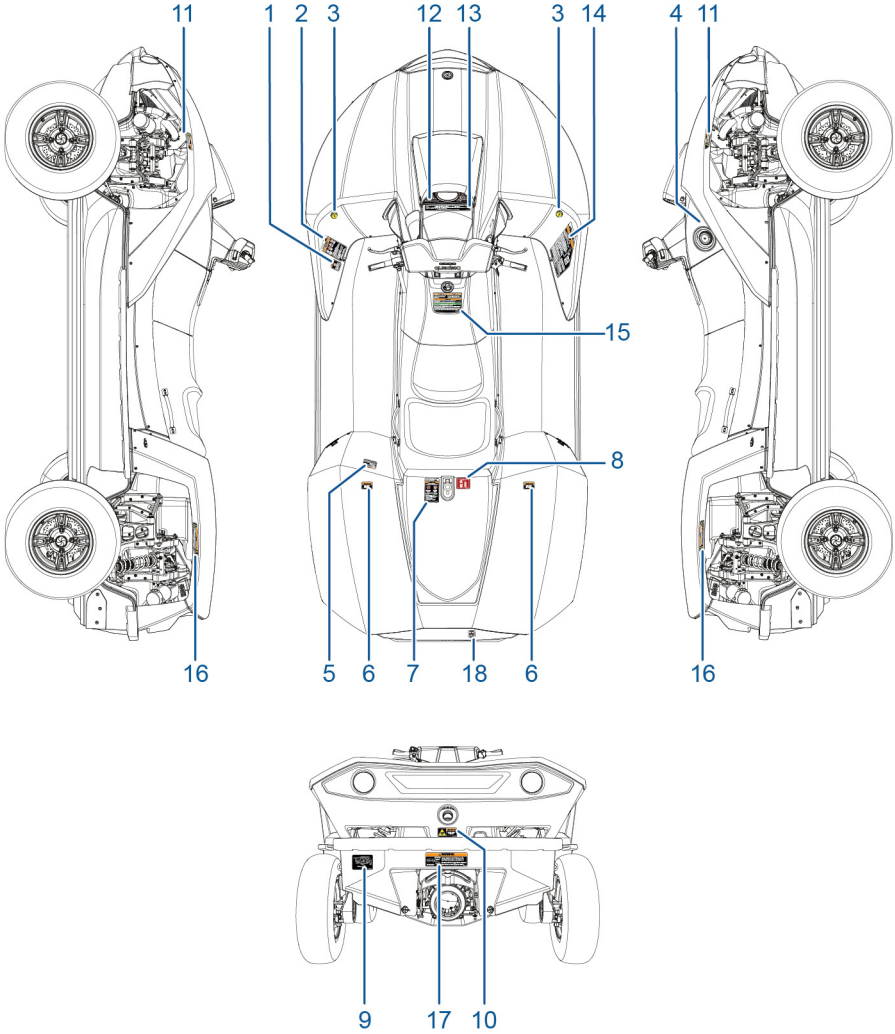

Label 1

Label 2

Label 3

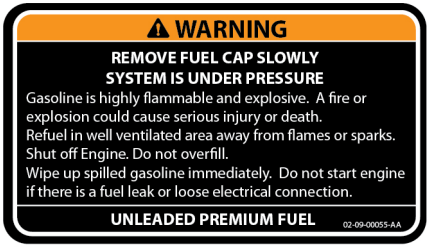

Label 4

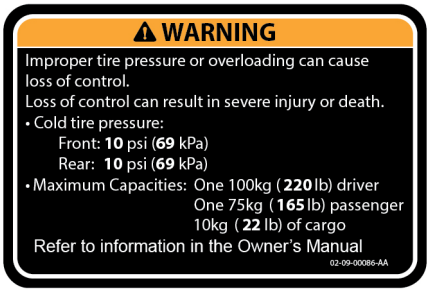

Label 5 (US and Canada)

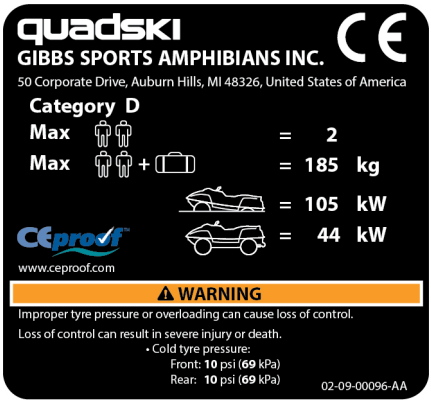

Label 5 (Europe)

Label 6

Label 7

Label 8

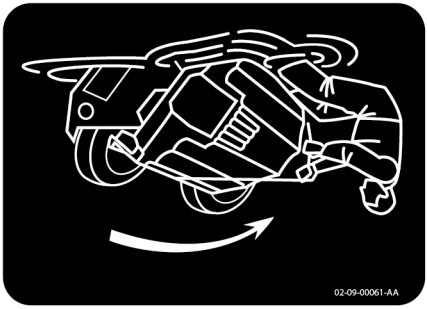

Label 9

Label 10

Label 11

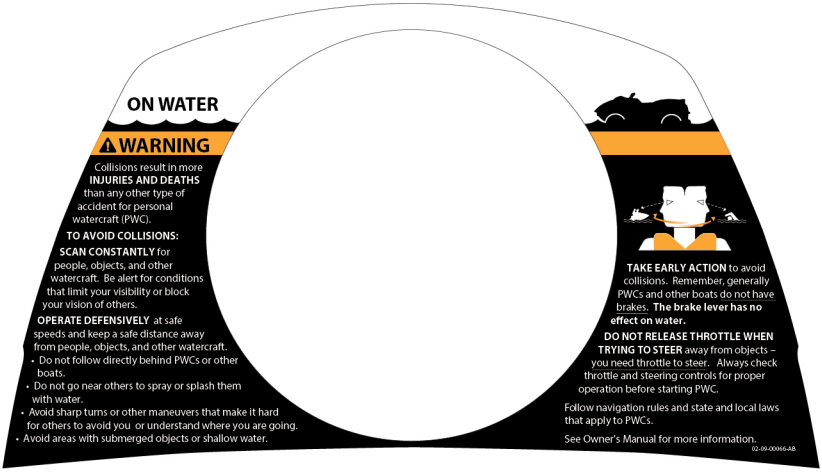

Label 12

Label 13

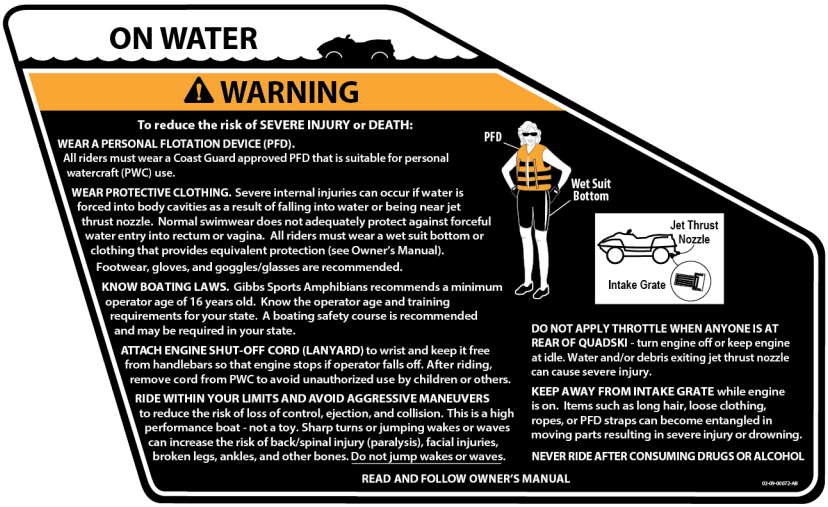

Label 14

⚠ WARNING

Pulling Marine reverse lever while moving forward can cause abrupt deceleration. This can result in severe injury, death or Quadski damage.

⚠ WARNING

Gasoline vapors can explode. Before starting engine, operate blower for 4 minutes by turning key to ON position, remove seat, and check engine compartment for gasoline vapors.

⚠ WARNING

- Improper water entry/exit can lead to getting stuck, loss of control, or collision.
- **Keep people away!**
  drive parts can entangle long hair, body parts, or other objects (such as ropes, loose clothing, PFD straps). The jet nozzle and rear wheels can throw debris and water rearward.

WATER ENTRY/EXIT INSTRUCTIONS

- See Owner's Manual for complete water entry and exit instructions
- Choose a site with smooth gradual slope and firm ground. Avoid debris and small objects.
- Enter the water at no more than 4mph (6.44 kph). Exit carefully and under control, but maintain enough speed to avoid getting stuck.
- Be sure water is deep enough and no people are nearby when deploying or retracting wheels.
- If you get stuck, turn the engine off before dismounting or allowing anyone near to help
- After existing water, drive slowly and apply brakes lightly several time to dry them.

02-09-00091-AB

Label 15

Label 16

Label 17

Label 18

Fuel Safety

WARNING! Gasoline vapors are highly flammable, have a low flash point and are explosive, especially in confined spaces. Avoid exposing the vapors to any potential sources of ignition as the resulting fire and explosion may cause serious injuries and/or death.

WARNING! Switch off the engine when refueling, as it is both a source of extreme temperatures and electrical sparks. Failure to do so may cause a fire or explosion.

WARNING! Do not smoke, use an open flame or cause sparks while refueling. The resulting fire and/or explosion may cause serious injury or death.

WARNING! Only use containers specifically designed for carrying fuel, failure to do so may result in spillage and cause a fire.

WARNING! Do not overfill the fuel tank. Overfilling may cause spillage when the amphibian is driven. Spillage may also occur if the fuel expands in high ambient temperatures.

WARNING! Do not start the amphibian if spilled gasoline or gasoline vapor is present.

Fuel Specification

NOTICE Do not use non-recommended fuels, leaded fuels, lead substitutes or fuel additives - these can cause damage to the engine, fuel and emission control systems. In addition:

- Fuel system cleaning agents should not be used as they may be harmful to fuel system components on your vehicle.
- If the fuel tank is filled with the wrong type of fuel, do not start the engine. It is essential that you seek qualified assistance. Running the engine can cause serious engine and fuel system damage.
- Never use fuel containing more than 10% ethanol or methanol. The use of a non-recommended fuel can result in decreased engine performance and damage to critical parts in the fuel system and engine.
- Only use a Premium unleaded fuel, see *Engine, page 87*.

  Note: Even a very small quantity of leaded fuel will damage your vehicle's emission control system and could invalidate the emissions warranty.

Fuel tank capacity

NOTICE Avoid running out of fuel. Doing so can cause damage to the vehicle's engine, fuel pump and emission control systems.

Total tank capacity	15 U.S. gallons (56.5 liters)

Fueling Procedure

WARNING! In warm temperatures the fuel tank may be pressurized, take care when removing the filler cap as fuel vapors may be released.

NOTICE Refueling on water is not recommended; if possible always refuel on land.

Before refueling, the operator and passenger should dismount the amphibian.

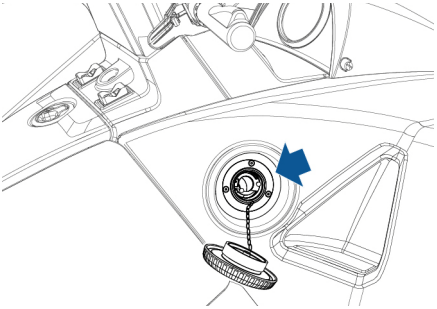

With the amphibian stationary and the engine off, slowly unscrew the fuel filler cap and allow the vapors to vent.

Note: A chain secures the fuel filler cap to the amphibian to prevent loss.

The filler tube accepts a narrow filler nozzle of the type found on pumps that deliver unleaded fuel.

Fill the tank slowly until the filler nozzle cuts off the fuel supply. Do not attempt to fill the tank beyond this point, or spillage could result due to expansion of the fuel.

When replacing the fuel filler cap, insert the retaining chain into the filler neck and tighten the cap until it clicks three times.

Emergency refueling

WARNING! It is possible to overfill the tank if a fuel dispensing pump is not used (e.g. portable fuel containers).

If, in an emergency, you have to refuel the amphibian from a source other than a filling station, check the specification of the fuel **before** refueling, and be careful not to overfill.

If you do have to refuel while on water, make every effort to avoid fuel spillage. Fuel can be very damaging to a marine environment.

Overview

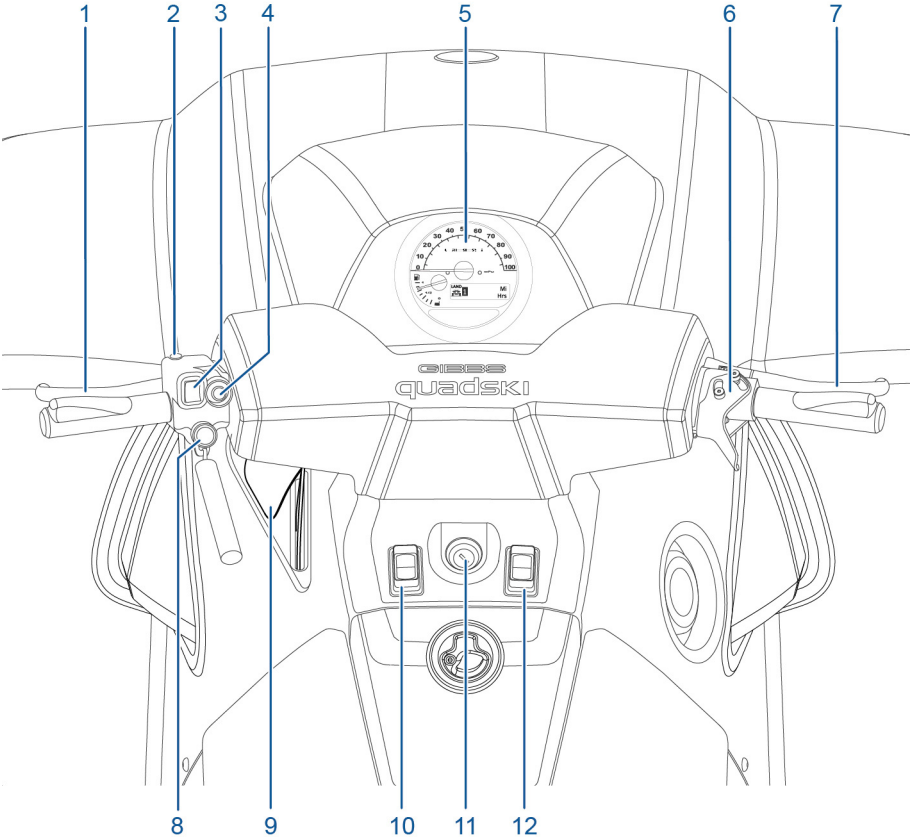

1. Brake lever (Land mode only)
   Rear brake lever - European spec Quadski
2. Reverse button (Land mode only)
3. Gear selection (Land mode only)
4. Engine start button
5. Instrument cluster
6. Throttle lever
7. Front brake lever - European spec Quadski
8. Engine stop/safety cut-off button
9. Reverse lever (Marine mode only)
10. Headlight switch (Land mode only)
11. Ignition switch
12. Suspension Deploy/Retract switch

Steering

WARNING! To avoid pinching body parts, never turn the handlebars while someone is near the jet thrust nozzle.

The handlebars control the direction of the amphibian when it is being operated on Land and Water.

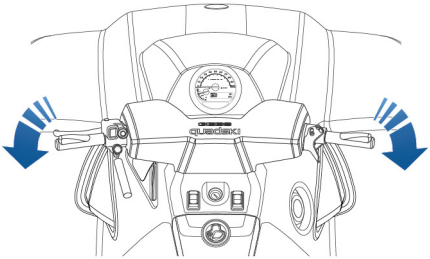

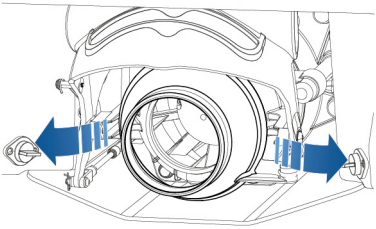

On land, the handlebars turn the front wheels for direction required.

Note: The jet nozzle also moves (in the opposite direction to the wheels) when turning on land.

On water, the handlebars move the jet thrust nozzle to direct the water output in the direction you want to turn the amphibian.

Note: When operating in reverse, you will need to turn the handlebars in the opposite direction to the direction you want to travel.

Ignition Switch

WARNING! Do not turn the ignition switch to the 'Lock' position while the amphibian is in motion - the steering lock will engage, making it impossible to steer the amphibian.

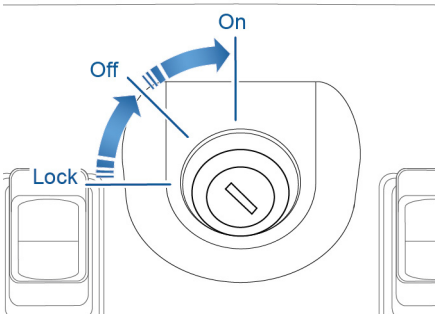

- Lock

  Turn the handlebars all the way to the left or right then turn the key counterclockwise to engage the steering head lock. No electrical circuits function.

- Off

  No electrical circuits function.

- On

  Turn the key fully clockwise to the 'On' position. The amphibian powers up and the instrument cluster illuminates.

Note: The key can be removed in both the 'Lock' and 'Off' positions.

Note: An audible tone (three beeps) will sound shortly after the engine has stopped if the key has not been removed.

Starting the Engine

WARNING! Never start or leave the engine running in an unventilated building - exhaust gases contain carbon monoxide, which can cause unconsciousness and may even be fatal.

WARNING! Gasoline vapors can explode. Before starting the engine, operate the ventilation blower for 4 minutes by turning the ignition key to the ON position. Remove the seat and check the engine compartment for gasoline vapors.

WARNING! Never operate the amphibian if the battery does not have sufficient power to start the engine or shows other signs of decreased power (for example, long or slow engine cranking). Loss of battery power when riding could leave you stranded.

To start the engine:

1. Insert the key in the ignition switch and turn the key to the On position. A buzzer will briefly sound to indicate that the ignition is On.
2. Check that the steering column lock has disengaged by moving the handlebars from left to right.

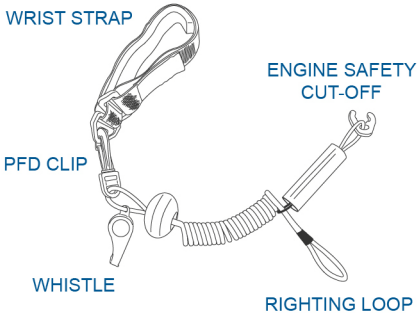

3. Make sure the engine safety cut-off is inserted under the engine off button and that the lanyard is secured to your wrist or your personal flotation device (PFD). If the operator falls off the amphibian the engine will stop when the safety cut-off is removed.
4. Make sure the throttle lever is not pressed.

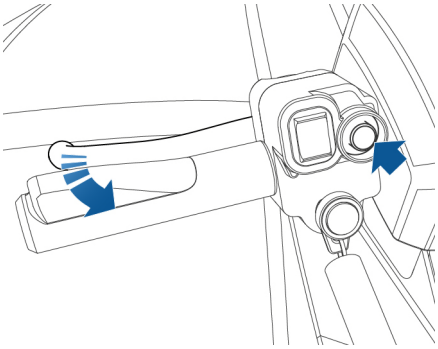

5. When on land, apply and hold the brake lever(s).
6. Press and hold the engine start button until the engine is running.
7. Release the start button once the engine has started.

WARNING! When the engine is started, gear 1 is automatically selected. Do not rev the engine when the amphibian is stationary.

WARNING! The jet impeller runs whenever the engine speed exceeds 2000 rpm irrespective of whether the amphibian is on land or water. Keep others away from the intake grate and jet nozzle when the engine is running.

Note: In cold conditions, the engine start time will increase.

Engine Stop/Cut-off

WARNING! To maintain directional control on water, the engine must be running.

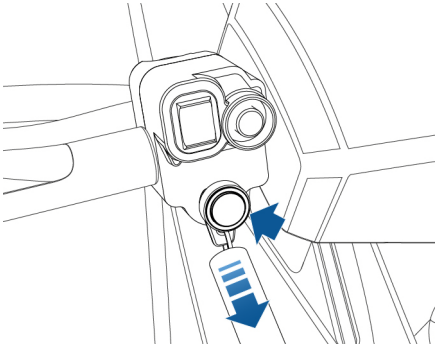

To stop the engine, press and hold the engine stop button or turn the ignition key to the Off position.

Alternatively, if the engine safety cut-off is pulled from under the engine stop button, the button will retract toward the handlebar and the engine will stop.

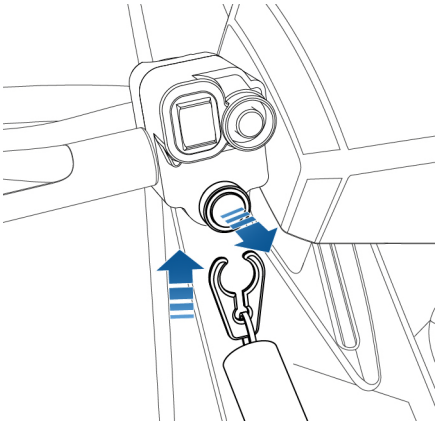

To reinstall the engine safety cut-off, insert the cut-off between the engine stop button and the handlebar.

Throttle Lever

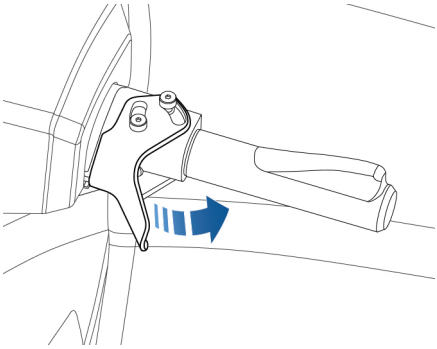

The throttle lever on the right handlebar controls the speed of the amphibian when it is being operated on both land and water.

- To increase or maintain the speed of the amphibian, press on the throttle lever with your thumb.
- To decrease the amphibian's speed, release the throttle lever.

Always use smooth transitions between throttle positions as sudden acceleration and deceleration may upset the handling of the amphibian.

Note: The throttle lever is spring loaded and should return to rest position (engine idle) when not pressed.

Selecting a Gear

The amphibian has a semi-automatic transmission with five forward gears (**1**-**2**-**3**-**4**-**5**). There is no neutral position. The selected gear is displayed on the instrument cluster.

The amphibian has an automatic/centrifugal clutch that relies on engine speed to engage forward gears.

When the engine is started and the amphibian is in Land mode, gear **1** is automatically selected.

At idle and low engine speeds, the clutch will disengage. Use the throttle lever to increase the engine speed. The clutch will automatically engage when the engine speed reaches approximately 2000 rpm.

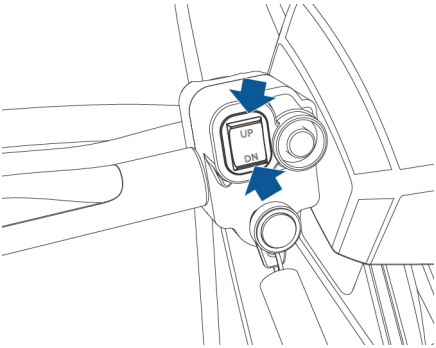

Use the gear selector switch to change gear.

- Press and release the upper half of the switch (UP) to upshift one gear.

  Note: There is no need to release the throttle when changing up a gear.

- Press and release the lower half of the switch (DN) to downshift one gear.

Always select an appropriate gear, by upshifting or downshifting, that is suitable for the terrain you are riding on, and allows you to ride the amphibian at the desired speed without over-revving or laboring the engine.

Note: If the throttle lever is released and the amphibian is slowing, the transmission will automatically downshift to select a gear appropriate for the speed.

When the amphibian is in Marine mode or transitions to Marine mode, gear **3** is automatically selected. Gear 3 provides you with the best performance and response when the amphibian is used on water.

Note: Operation of the gear selection switch is inhibited while the amphibian is in Marine mode or stationary on land.

Selecting reverse on land

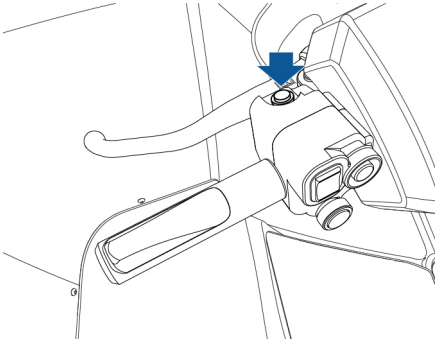

With the amphibian stationary and the throttle lever released, press and hold the reverse button to engage reverse. The instrument cluster will display an **R** to confirm that reverse is selected.

The amphibian will immediately start to move at low speed as soon as reverse gear is engaged.

Note: To prevent excessive drain on the battery, operation of reverse motor is limited to intervals of 10 seconds.

Note: Selection of reverse is inhibited if the amphibian is moving forward.

Selecting reverse on water

Reversing the amphibian on water is different to reversing the amphibian on land. Because the amphibian is powered on water by a jet of high pressure water at the rear, you can't simply change the direction of the water impeller to make the amphibian go in reverse.

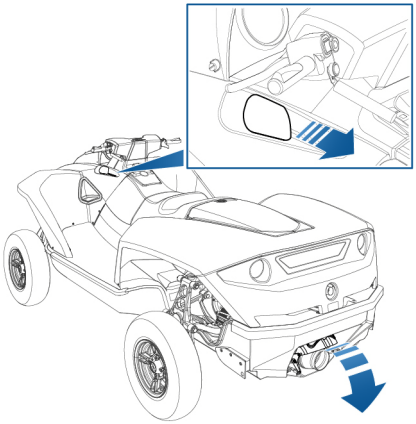

To move the amphibian in reverse on water, a lever is fitted to the amphibian that allows you to lower a reverse bucket across the water output. This reverse bucket is shaped to deflect the jet of high pressure water forward under the hull, which in turn pushes the amphibian in reverse.

- Pull the lever towards you to lower the reverse bucket.
- Push the lever away from you to raise the reverse bucket.

By adjusting the height of the reverse bucket and the engine speed you can maneuver the amphibian at low speeds in reverse.

Note: Too high an engine speed will create water turbulence and reduce the amount of reverse thrust.

Note: Remember when operating in reverse, you will need to turn the handlebars in the opposite direction to the direction you want to travel.

Braking (Land Mode Only)

Your amphibian is equipped with hydraulically operated brake calipers and rotors on each wheel.

Dependant upon specification, your Quadski, will either be equipped with a single brake lever that operates the brakes for all four wheels, or dual brake levers that operate the brakes for the front and rear wheels independently.

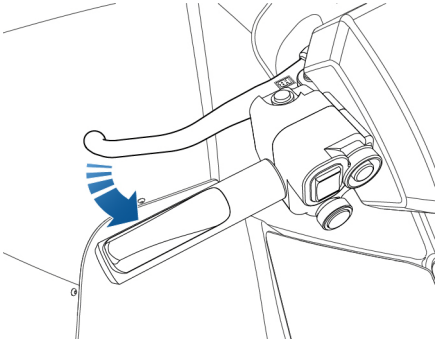

Apply the brake lever(s) smoothly with increasing pressure to slow or stop the amphibian.

Note: Remember, the brake lever(s) will only slow or stop the amphibian when it is being ridden on land and has no effect when the amphibian is being used on water.

Parking Brake (Land Mode only)

WARNING! Do not ride with the parking brake applied, or apply the parking brake while moving; this could result in loss of control and may damage the brakes.

The brake lever(s) have a parking brake feature that allows the amphibian to be left unattended with the brakes applied.

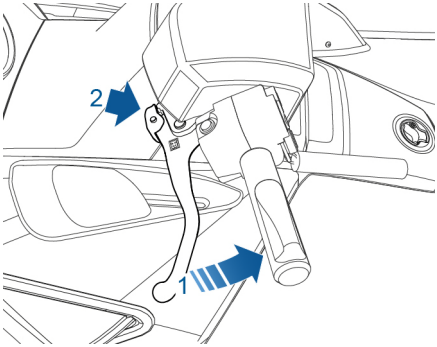

To apply the parking brake:

1. Squeeze the brake lever.
2. Push the parking brake lock into position.
3. Release the brake lever while holding the lock in position.
4. If your Quadski has dual brake levers, apply the parking brake on the other brake lever.

NOTICE The position of the parking brake lock can vary depending on brake pad wear. Make sure the parking brake is fully applied to secure the amphibian in place.

To release the parking brake:

1. Squeeze the brake lever(s) and the lock(s) will automatically release.

Instrument Cluster

Note: As a system test, when the ignition switch is turned on, the speedometer and fuel gauge needles will move fully across the range of the gauges before settling on the actual reading.

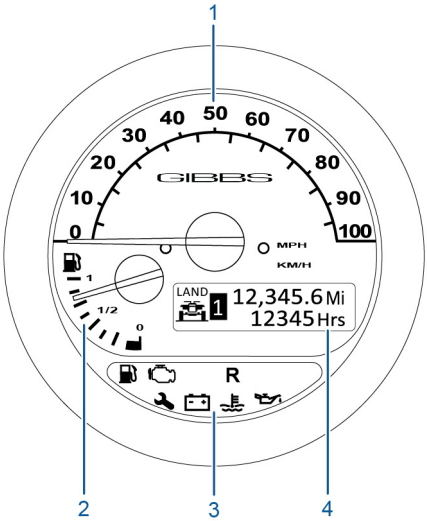

1. Speedometer
2. Fuel gauge
3. Indicator lights
4. Information display

Information display - Ignition On

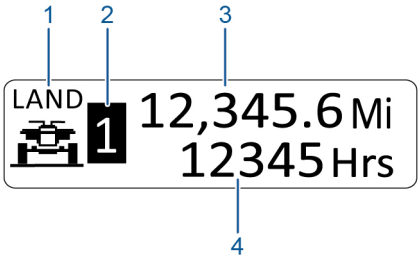

1. Current operating mode (Land/Marine)
2. Gear selected (Land mode only)
3. Odometer

   Total distance in miles/kilometers that the amphibian has traveled on land.
4. Operating hours

   When the ignition switch is first turned On, the total number of hours the amphibian has been operated in both Land and Marine modes is shown.

   After a few seconds, the display will change to show only the number of hours the amphibian has been operated in Marine mode.

Information display - Land mode with engine running

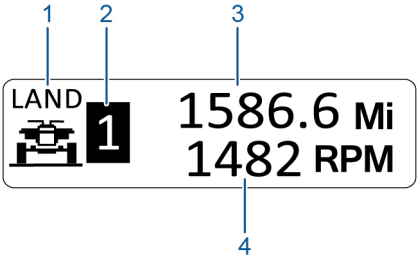

1. Land mode
2. Gear selected
3. Odometer
4. Engine speed (Revolutions Per Minute)

Information display - Marine mode with engine running

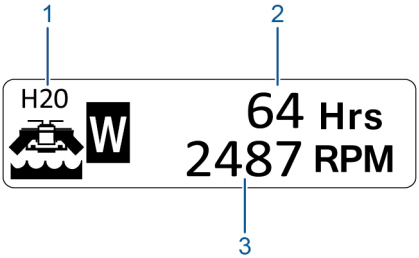

1. Marine mode
2. Operating hours in Marine mode
3. Engine speed (Revolutions Per Minute)

Indicator lights

The following indicator lights will illuminate briefly when the ignition is first turned on. They should then extinguish unless the indicator is applicable to the current situation.

Note: If an indicator fails to illuminate or extinguish, contact a Gibbs Sports Amphibians dealer for assistance.

Indicator	Description
	Battery charge indicator Illuminates red if the battery charge level is low or the battery is not charging. If this light illuminates while the engine is running, stop as soon as safety permits and contact a Gibbs Sports Amphibians dealer.
	Engine oil pressure Illuminates red when the oil pressure is low. If this light illuminates while the engine is running, stop the engine and check the oil level. If required, fill-up the engine oil to the correct level. See *Engine Oil, page 65*. If the light remains illuminated, contact a Gibbs Sports Amphibians dealer.
	High temperature Illuminates red if the coolant temperature is too high. Stop the amphibian and switch off the engine. Allow the system to cool, then check the coolant level and fill-up if necessary. Flashes red if the differential oil temperature is too high. Engine speed will be limited to prevent damage to the differential. When safe to do so, stop the amphibian and switch off the engine to allow the system to cool. Wait for the light to extinguish before riding again. If the light illuminates again within a short period of time, contact a Gibbs Sports Amphibians dealer.

Indicator	Description
	Low fuel warning Illuminates yellow when the remaining fuel level reaches the 1/8 level approximately 1.9 gallons (7.2 liters).
	Check engine Illuminates yellow if an engine malfunction has been detected. Cycle the ignition switch Off and back On. If the light remains illuminated, contact a Gibbs Sports Amphibians dealer.
	Service required Illuminates yellow when the amphibian requires servicing. Contact a Gibbs Sports Amphibians dealer to arrange a service.
R	Reverse indicator Illuminates yellow when reverse gear is selected.

Suspension Retract/Deploy Switch

NOTICE Repeatedly operating the suspension switch without the engine running will deplete the 12V battery.

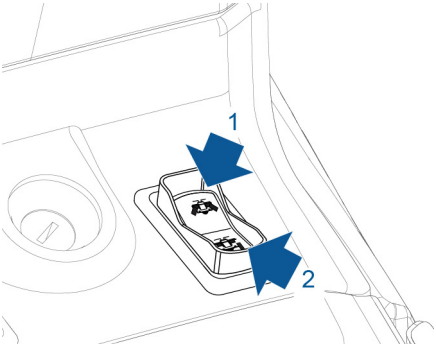

1. Retract suspension - Marine mode
2. Deploy suspension - Land mode

The suspension switch activates an automatic system which retracts the suspension for Marine use or deploys them for Land use.

WARNING! Do not deploy the wheels at planing speed as it will adversely affect the handling.

Note: Operating the switch will not retract the suspension unless the amphibian is in water.

Suspension fault

If a suspension fault occurs while the suspension is transitioning between Land and Marine modes, a warning icon will be displayed in the instrument cluster accompanied by a **RETRACT FAULT** or **DEPLOY FAULT** message.

*Note: Dependent upon the type of fault, an **X** may be shown on the icon to denote the wheel that failed to retract or deploy.*

Try to lower or raise the suspension back to the position it was in prior to the mode selection request.

If the suspension failed to deploy, move the amphibian to deeper water and the repeat the process.

If the suspension still fails to retract or deploy, remove the engine safety cut-off and check for any trapped debris around the suspension

WARNING! Remove the engine safety cut-off to prevent the engine from running. If the engine is running and the throttle is applied, the wheels and drive train may rotate and items such as long hair, loose clothing, ropes or PFD straps could become entangled or be drawn into the intake grate.

If the suspension fails to fully deploy, do not attempt to ride the amphibian out of the water. If possible, beach the amphibian and contact a Gibbs Sports Amphibian dealer for assistance.

Headlights

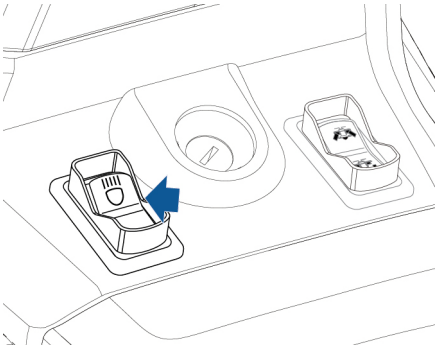

Press the switch to turn the headlights On or Off.

Note: The headlight, tail lights, and brake lights do not operate when the amphibian is in Marine mode. If the amphibian changes to Marine mode when the lights are On, they will automatically be switched Off.

Front Storage Compartment

Note: The front storage compartment can be used for storing a crash helmet or other personal items. We recommend you store items within a dry bag inside this area.

Removal

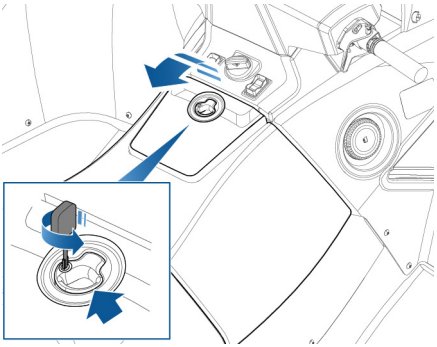

1. Lift the release ring and pull up to release the retaining latch.
2. Slide the cover forwards to release from the mounting bracket and remove.

Note: The storage compartment cover can be locked using the key to secure the release ring.

Installation

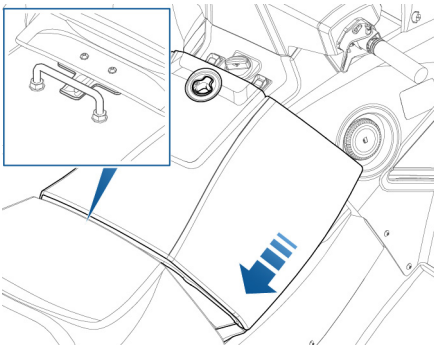

1. Position the cover on the amphibian and make sure the tongue is correctly located underneath the mounting bracket.
2. Push down on the front of the cover to engage the retaining latch.
3. Check the cover is firmly secured.

Rear Storage Compartment

Note: We recommend you store items within a dry bag inside this area.

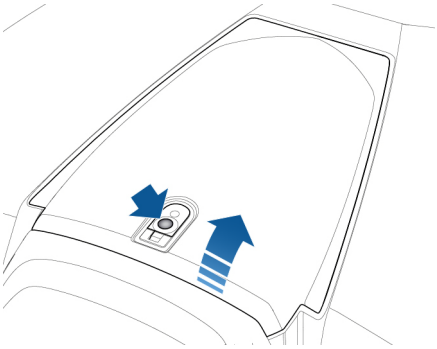

Push button, lift the latch and pull up to open the storage compartment.

Fire Extinguisher

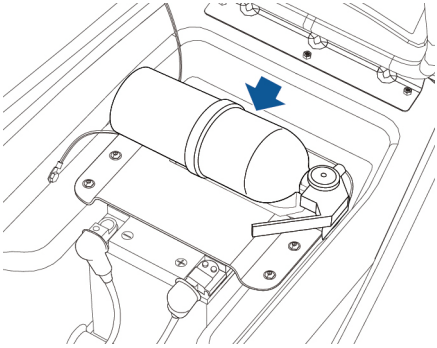

To ensure that your amphibian meets the requirements for operating on water, a fire extinguisher is located in the rear storage compartment.

The fire extinguisher supplied with the amphibian is a dry chemical fire extinguisher is designed for marine environments and is U.S.C.G approved.

The extinguisher is designed for one use only and is effective on electrical, gas, oil and grease fires. Replacement fire extinguishers are available from your Gibbs Sports Amphibians dealer.

Flag Mount

Note: Dependent upon local rules, you may be required to install a highly visible red or orange flag when operating the amphibian on sand or other off-road areas.

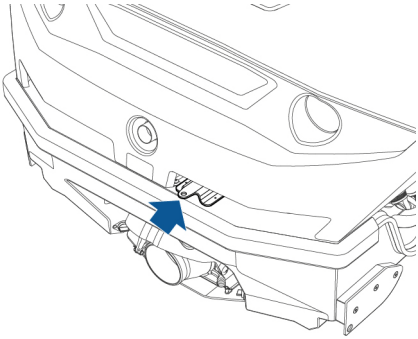

The bracket located at the rear of the amphibian is for mounting a flag only.

WARNING! Do not use the flag mounting bracket for towing or mooring the amphibian. Excessive force on the bracket could cause it to fail or break free from the hull, potentially striking bystanders.

Front Eyelet

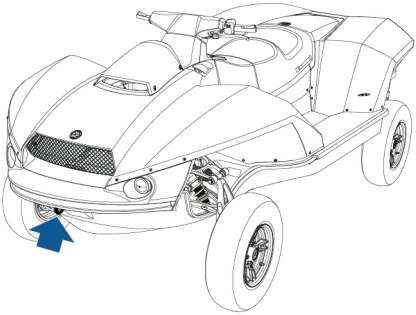

Only use the front eyelet for recovering the amphibian or securing to a trailer.

WARNING! Excessive force on the eyelet could cause it to fail and break free from the hull, potentially striking bystanders.

New Amphibian Break-In

NOTICE Your Quadski will perform better in the long run if you perform the following guidelines:

1. Start the amphibian and let the engine warm up at idle for approximately 5-10 minutes.
2. Throttle at a moderate to fast idle below 2000 RPM for 10 minutes.
3. Ride the amphibian using various engine speeds, see below.

Engine running procedure (first 10 hours)

- Do not exceed 50% sustained throttle opening for the first five hours of engine running, and 75% throttle opening for next five hours.
- Vary engine speed regularly during this time, and brief 5-10 second periods of acceleration are permitted for getting on plane and to change speed.
- Do not labor or overload engine.
- Include at least two hours water running in this 10 hours.

Note: After the first 10 hours of running, the air cleaner should be checked and the oil filter replaced. See *Maintenance Requirements, page 59*.

Plan Your Trip

WARNING! Failure to plan ahead before departing on a trip, as discussed in this section, can increase your risk of damaging the amphibian, becoming stranded, or having an accident that can result in severe injury or death.

Before departing, be sure to plan ahead and be prepared for situations you might encounter on your outing.

Plan your route before you go. Only operate where permitted by local authorities.

Avoid routes which involve crossing frozen bodes of water unless you have confirmed that the ice can support the weight of amphibian, you, your passenger and your cargo.

Tell someone where you plan to go (leave a float plan for water outings). Take maps and charts for the areas where you will operate.

Ensure there is enough fuel in the tank for the planned trip.

Check the weather before departing, and be aware of changing conditions. Be prepared for cold, heat or precipitation, depending on the forecast.

Trips On Water

Make sure that there are suitable entry and exit points to and from the water. See *Entering And Exiting The Water, page 44*.

Always stay within sight of shore; the amphibian is not intended or equipped for operating off shore.

Avoid rough water.

Make sure that you can complete your trip during day light. The amphibian is not equipped for nighttime operation on water. The amphibian's lights operate only on land.

Trips On Land

Avoid extreme conditions (for example deep mud, rugged terrain) and make sure your route is on prepared trails that are wide enough for you to safely ride the amphibian. See *Dimensions - On Land, page 85*.

Note: The amphibian is wider than typical ATVs.

Pavement

Avoid riding your amphibian on paved surfaces, including sidewalks, driveways, parking lots or streets (except for traversing as permitted by law).

If it is necessary to ride on or across a paved surface, proceed slowly and with caution.

Public roads

Never operate the amphibian on any public street, road or highway, including dirt and gravel roads.

In many states it's unlawful to operate ATVs on public streets, roads and highways.

What to Wear and Bring

Local, state, and federal regulations requires various gear when operating on land and on water. Check with your local officials to determine what gear you and your passenger are required to wear and to bring on your ride.

Before each ride, determine what gear is needed for the environments you may encounter, and dress appropriately. Considerations include such things as:

- Temperature, weather, and riding environment. For example, your choice of gloves may depend on temperature and riding environment. See *Operating in Cold Weather, page 31*.
- Type of trails you'll be on. For example, if there will be overhanging branches, you may want heavier protective gear than if you are riding on open trails and water.
- Mode(s) - land only, water only, or both. For example, if you will be primarily riding on water, a wet suit bottom would be a good choice. If you will be riding on both land and water and do not plan to get in the water, thick tightly woven jeans may be appropriate.

Never wear loose clothing such as a long scarf that may get entangled in the vehicle or on objects such as tree branches.

When deciding what to bring and how to carry your equipment, keep cargo and load limits in mind. See *Cargo and Load Limits, page 32*.

Note: Items that cannot be securely stowed in either of the storage compartments, should be carried in a backpack on the operator's or the passenger's back.

Required protective gear

1. Personal Flotation Device (PFD)

   When using the amphibian on water, riders must always wear a US Coast Guard approved PFD that is suitable for personal watercraft (PWC) use. Ensure that the PFD meets all the local regulations for watercraft use.

   A PFD provides buoyancy to help keep the head and face above the water, and to help maintain a satisfactory body position while in the water. Body weight and age should be considered when selecting a PFD. The buoyancy provided by the PFD should support your weight in water. The size of the PFD should be appropriate for the wearer. Body weight and chest size are common methods used to size PFDs.

2. Helmet

   When riding the amphibian on land, riders must always wear an approved motorcycle helmet that fits properly. Riding on land without an approved helmet increases your chances of a severe head injury or death.

   In most motorized sports, the benefits of wearing a helmet clearly outweigh the drawbacks. However, in the case of motorized watersports such as riding personal watercraft, this is not necessarily true as there are some particular risks associated with the water.

   - In some situations when falling off personal watercraft, helmets have a tendency to catch the water, like a 'bucket' and put severe stresses on the neck or spine. This could result in severe or permanent neck or spine injury or death.
   - Helmets may interfere with peripheral vision and hearing, or increase fatigue which could increase the risk of a collision.

   When deciding whether to wear a helmet on water, consider factors such as the riding environment, the traffic and water conditions, your riding ability and the type of riding you plan to do.

3. The rider and passenger should also have ready access to shatterproof glasses. Wind, water spray and speed may cause a person's eyes to water and create blurred vision. Eye wear helps protect eyes from debris or other objects, wind, or water spray that might injure the eyes or impede vision, potentially resulting in an accident.

Recommended protective gear

When using the amphibian, the following protective gear is also recommended in addition to the required safety equipment:

On water:

- Wear a wet suit bottom, or thick tightly woven and snug fitting clothing that provides equivalent protection, such as sturdy jeans or thick off-road motorsport pants. Severe internal injuries can occur if water is forced into body cavities as a result of falling into water or being near the jet thrust nozzle. Normal swim wear and other thin fabrics do not adequately protect against forceful water entry into rectum or vagina.
- Footwear, gloves, and goggles or shatterproof glasses are also recommended. Wind, water spray and speed may cause a person's eyes to water and create blurred vision.

On land:

- Eye protection, if not using a full face helmet. Riding without eye protection can result in an accident and increases your chances of a severe injury in the event of an accident.
- Gloves to protect your hands
- Motorcycle boots to protect your feet and lower legs.
- Full length pants
- A long sleeved shirt or jacket

Protective clothing can reduce your risk of injury in an accident and provide protection from the elements, debris or contact with objects such as branches.

Required safety equipment

In addition to your personal protective equipment (for example, PFD), you must carry some specific safety equipment when riding on water.

As the owner of the amphibian, you are responsible for assuring that all required safety equipment is aboard. Check state and local regulations about required safety equipment.

Minimum requirements for use on water include the additional following equipment:

- A sound producing device (for example, a whistle or air horn)
- A fire extinguisher - available from your Gibbs dealer. See *Fire Extinguisher, page 25*.

Additional recommended safety equipment

It is recommended that you consider carrying additional equipment for safe, enjoyable use of your amphibian. This list, which is not all inclusive, includes items you should consider acquiring.

- Small tool kit
- First aid kit
- Recovery rope
- Flares
- A watertight flashlight

A cellular telephone in a waterproof bag or container may also be beneficial if you get into difficulty or just for contacting someone.

Operating in Cold Weather

Exposure to cold

Dress appropriately for cold weather and take measures to avoid hypothermia, frost bite, and other cold-related injuries.

Factors which increase your chance of a cold injury include:

- using the amphibian in cold air or water
- windchill factor due to riding speed - even moderate speed can result in colder windchill
- riding in areas where rescue may be delayed
- getting wet or falling in the water
- being unable to get on top of a capsized amphibian

Plan your rides and your gear accordingly. Be prepared for bad weather and breakdowns. If you will be riding on the water, consider a thick wetsuit, a drysuit, or other gear that will help you stay warm and/or dry, or items such as a coat or jacket style PFD that will cover more body area and provide more insulation than a vest style PFD. Keep in mind that getting wet and falling in is always a possibility when riding on water. If you do fall in, reboard the amphibian as soon as possible.

Operating on land

The Quadski uses raw water heat exchangers to cool the engine oil and coolant when operating in marine mode. If you are planning to use the Quadski on land and the ambient air temperature is likely to fall below 0°C (32°F), the Quadski must be emptied of raw water to prevent damage to the cooling system. See *Removing Raw Water From The Quadski, page 81*.

Operating on frozen bodies of water

Never operate on a frozen body of water unless you are sure the ice is thick enough to support the weight and moving force of the amphibian, you, your passenger, and your cargo.

Even though the amphibian can float, it may become stuck if it falls through the ice.

Operating with a Passenger

Practice without a passenger first

Before you carry a passenger, practice and get experience operating in a variety of conditions so you can proficiently operate the amphibian.

Passengers affect vehicle operation

Carrying a passenger can affect handling, acceleration, slowing, and stability. Stopping distance may be longer. Go more slowly and allow extra time and distance for maneuvers. On land, have the passenger dismount when conditions require.

Be responsible for your passenger's safety

You are responsible for the safety of your passenger. Before starting your ride, instruct your passenger and be sure they are wearing the correct protective gear for your intended ride.

Do not start the engine until your passenger is properly seated and holding on. Ride within the ability of your passenger. Let your passenger know before accelerating or performing sudden maneuvers. Avoid unexpected or aggressive maneuvers that could cause a passenger to fall from the vehicle, and never try to throw off them off. If your passenger falls or is thrown off the vehicle, it may result in impact injuries, injuries from moving parts or jet thrust, drowning, or other severe injury or death.

Cargo and Load Limits

Overloading can affect maneuverability, stability and performance that could lead to an accident. The maximum weight of the operator, a passenger, and any cargo must not exceed 407 lbs (185 kg). Refer to the tire pressure label for more information. See *Safety Labels, page 7*.

Items that cannot be securely stowed in either of the storage compartments, should be carried in a backpack on the passenger's back.

Straps should not be used to secure items to the amphibian's body, as they may unexpectedly shift while the amphibian is in motion. The sudden redistribution of weight could cause you to lose control of the amphibian.

The only places designed to carry items on the amphibian are the front and rear storage compartments. Make sure that the storage compartments are closed securely before starting your ride

NOTICE Do not allow people to climb on the front or rear body panels at any time. They are not designed to support a person's weight.

Pre-ride Inspection

WARNING! Always perform a pre-ride inspection before each use to make sure the amphibian is in a safe operating condition. The pre-ride inspection can also help you monitor wear and deterioration before they become a problem as well as identify and correct any problems that could make the amphibian hazardous to operate (for example, debris or ice interfering with operation of controls). Before riding, correct any problems that you discover to reduce the risk of a breakdown or crash. Contact a Gibbs Sports Amphibians dealer as necessary.

Note: Start the pre-ride inspection with the amphibian on Land, the engine off and engine safety cut-off removed.

Engine compartment	**WARNING! Gasoline vapors can explode. If a fuel leak or gasoline vapor is present, do not start the engine. Contact a Gibbs Sports Amphibians dealer before use.** Before starting the engine, operate the ventilation blower for 4 minutes by turning ignition switch to the ON position. Remove the seat (see *Seat, page 68*) and check the engine compartment for fuel leaks or gasoline vapors.
Engine coolant	**WARNING! Do not remove the coolant reservoir cap when the engine is hot – escaping steam or water could cause serious injury.** Check the engine coolant level is correct. See *Engine Coolant, page 66*.
Tires	Use a gauge and check the pressure of each tire and adjust as necessary. Check the condition of each tire for signs of damage or excessive wear and replace if required. See *Wheels and Tires, page 78*.
Lights	Make sure the headlights, brake light and tail lights are operating correctly.
Visual inspection - Leaks, loose parts or hull damage	Visually inspect the amphibian for signs of any fluid leaks, components that may have come loose, hull cracks or other damage.
Exhaust system	**WARNING! Take care when working around exhaust system components as they may still be hot even when the engine is not running.** Inspect the end of the muffler to ensure that there is no ingress of foreign material that could start a fire.
Hull drain plugs	Make sure both hull drain plugs are securely fitted. See *Hull Drain Plugs, page 77*. *NOTICE* If drain plugs are not fitted, water could enter the hull impacting performance and cause possible engine damage.

Underbody, Jet thrust water intake

WARNING! Make sure the engine is not running and the engine safety cut-off is removed. The jet impeller runs whenever the engine speed exceeds 2000 rpm in both Land and Marine modes. Items such as long hair, loose clothing ropes or PFD straps can be drawn into the intake grate and become entangled in moving parts.

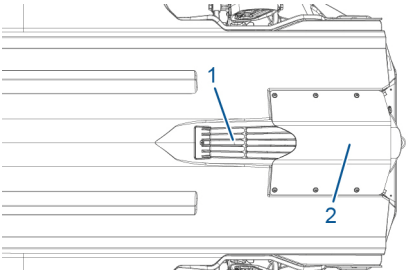

1. Water intake
2. Ride plate

Check and remove any dirt, vegetation, stones, or other debris that could interfere with the operation of the amphibian, restrict the flow of water into the jet thrust water intake, or damage the propulsion unit.

Clean as necessary. If any obstruction cannot be removed, contact a Gibbs Sports Amphibians dealer.

Check the ride plate for signs of damage.

Steering system and reverse lever/ bucket

WARNING! To avoid pinching body parts, never turn the handlebars while someone is near the jet thrust nozzle.

With the handlebars in the horizontal position, the jet thrust nozzle should be in the straight position.

Make sure the jet thrust nozzle pivots in the same direction as the handlebars (e.g. when the handlebars are turned to the left, the nozzle opening must point towards the left side of amphibian).

Check to see that the reverse lever lowers and raises the reverse bucket across the jet thrust nozzle.

Brake lever(s)	Check the brake lever(s) for travel and firmness. When squeezed, the brake lever should feel firm. If the brake lever feels spongy, there may be a fluid leak or a low fluid level in the master cylinder. Check the brake fluid levels (see *Brake Fluid, page 67*) and contact a Gibbs Sports Amphibians dealer if necessary. When you begin your ride, start at low speed and test brake response. Listen for any unusual noises and verify that the brakes securely hold the amphibian. In below freezing temperatures, reduced brake response during this check may indicate frozen brakes. If brakes are frozen, stop riding and move the amphibian to a warmer area to allow brakes to thaw, then dry the thawed brakes by applying them several times while riding slowly.
Throttle lever	Before starting the engine, check that the throttle lever operates smoothly and returns to the idle position immediately after it is released. If the throttle lever sticks or doesn't return to the idle position when released, contact a Gibbs Sports Amphibians dealer.
Engine safety cut-off switch and Start button	With the ignition switch in the 'On' position, and with the engine safety cut-off not installed, apply the brakes and press the engine start button - the engine should not start. Install the engine safety cut-off, apply the brakes and press the engine start button - the engine should start. Press the stop button. The engine should stop. Restart the engine, then pull the engine safety cut-off strap. The safety cut-off should separate from the stop button and the engine should stop. If removing the engine safety cut-off or pressing the stop button does not stop the engine, contact a Gibbs Sports Amphibians dealer.
Safety Equipment	Check you have the required safety equipment and any additional gear needed for your journey. Make sure that all lifesaving equipment, including fire extinguisher, are in safe operating condition and easily accessible.
Fuel level	Always make sure that you have enough fuel in the amphibian before using it.
Engine oil	After you have been riding for ten minutes, check that the engine oil level is between the MIN and the MAX level indicators on the dipstick. See *Engine Oil, page 65*.

Riding Locations and Surfaces

WARNING! Make sure all operators follow the rules for safe operation on land in this section, and any passengers have been instructed in safe riding. Failure to do so can increase the risk of collisions, overturning, passenger ejection, impact injuries, injuries from moving parts, and other accidents that can cause severe injury or death.

Learn about off-road safety and laws and regulations

It is highly recommended that you complete an ATV rider safety course. Ensure that you are familiar with local and federal laws and regulations concerning the riding areas that you will use.

Be qualified

Be sure all operators are qualified to operate this amphibian on land and that any passenger is capable of riding safely. See *Rider Qualifications, page 4*.

Plan your ride

Before you go, plan ahead for where you will be riding, what to wear, and what to bring. See *Planning a Safe Trip, page 28*.

Prepared trails

On land, the amphibian should be operated on prepared trails only. Avoid extreme conditions such as deep mud or rugged terrain.

Your amphibian is rear wheel drive only and will not have the same level of traction as a four wheel drive ATV.

Note: When riding off-road, obey local off-road riding laws and regulations.

Riding on unfamiliar terrain

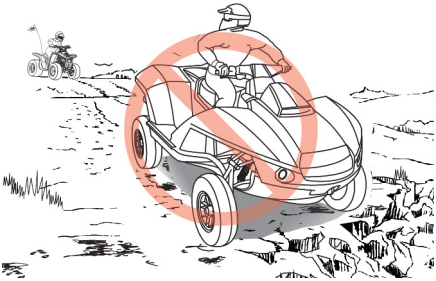

Use caution and reduce your speed when riding on unfamiliar terrain. Driving too fast for the terrain could result in you losing control of the amphibian, overturning or damage to the hull.

Always be alert to changing terrain conditions and stay focused upon the terrain ahead as you could come across hidden rocks, holes or other obstacles without enough time to react.

Slippery or loose surfaces

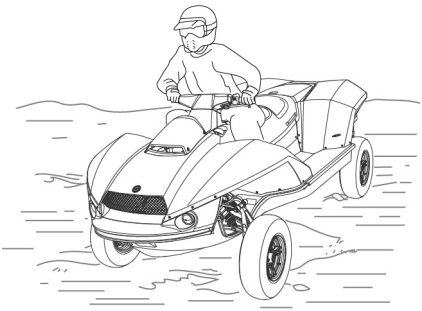

Terrain surface and speed are the major factors determining how the amphibian will react in a turn. Riding on loose, slippery or rough terrain (for example, snow, ice, mud, or gravel) makes it more likely for the amphibian to lose traction and skid or slide. This can result in a collision, or, if you unexpectedly regain traction, could result in the amphibian overturning or passenger ejection. Stopping distances can also be longer.

To reduce your risk:

- avoid these slippery surfaces if possible,
- practice maneuvering in slippery terrain in a controlled situation before going for a ride where you might encounter such terrain, and
- use caution and go slowly on slippery surfaces.

Skidding and sliding

To avoid skidding and sliding, reduce the amphibians speed before commencing the turn. If the amphibian starts to slide sideways in a turn, turn the handlebars in the direction of the slide.

Avoid heavy braking or application of the throttle until you have regained steering control.

Public roads

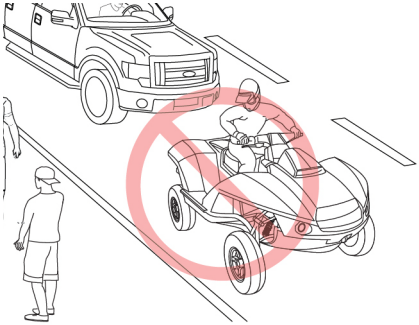

Never ride on a public street, road or highway (except for traversing as permitted by law). This includes unpaved dirt or gravel roads.

Operating the amphibian on public streets, roads or highways could result in a collision with another vehicle. Drivers of other vehicles may have difficulty seeing or avoiding you.

In many states it's unlawful to operate ATVs on public streets, roads and highways.

Paved surfaces

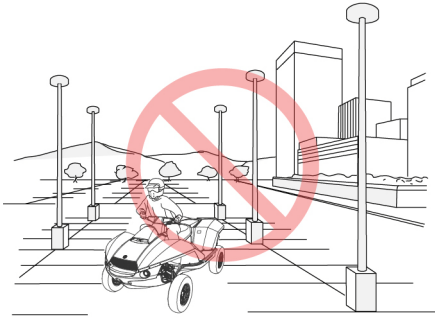

Avoid riding on paved surfaces, including sidewalks, driveways, parking lots and streets.

Your amphibian and the tires installed on it are designed and manufactured for off-road use only. Riding on paved surfaces will affect the handling and control of the amphibian.

If it is necessary to ride on or across a paved surface, proceed slowly and with caution.

Sand dunes and hilly terrains

When riding on terrains where you might not be easily visible to others, consider installing a flag (available from a Gibbs Sports Amphibians dealer) to alert other off-road users to your presence. See *Flag Mount, page 26*.

Always be observant for other off-road vehicles.

Note: You may be required to install a flag in certain riding areas. Check with local authorities.

Crossing shallow water

Your amphibian can cross shallow water in Land mode. When crossing shallow water, keep in mind that the jet intake is operating whenever throttle is applied, and can draw in debris, weeds, etc.

Before entering the water, choose a crossing point which has a gentle incline into and out of the water. Avoid areas which have fast moving water or a sharp drop off. Avoid rocks or other obstacles.

Note: Be aware that the amphibian will float if the water is deep enough, and may be carried in the direction of the current.

After the amphibian has been ridden through water, apply the brakes lightly several times while moving to dry them. Wet brakes will reduce the stopping ability of the amphibian.

Speed

Never operate the amphibian at speeds too fast for your skills or the conditions. Always ride at a speed that is appropriate for the terrain, visibility, operating conditions and your experience to avoid losing control.

Operator Position

Always straddle the seat with a foot in each footwell and both hands firmly gripping the handlebars while riding.

Riding with one hand or your feet incorrectly positioned will reduce the amount of control you have on the amphibian if you need to react to a situation or could cause you to lose balance and fall off.

Passenger Position

WARNING! Never hold on to the operator when riding as the operator may not be able to withstand the lateral force generated by both.

Always straddle the seat with a foot in each footwell and both hands firmly grasping the grab handles on the sides of the seat.

Riding with hands or feet incorrectly positioned could cause you to lose balance and fall off.

Braking

Applying the brakes too hard may cause the wheels to lock and slide, reducing control of your amphibian. If this happens, release the brake lever(s), steer straight ahead until you regain control, then reapply the brakes more gently.

Braking in a turn may cause the wheels to slip and reduce control. Avoid heavy braking while turning. If possible, reduce your speed or complete braking before entering a turn.

When riding in wet or rainy conditions, or on loose surfaces, the ability to maneuver and stop will be reduced. Rapid acceleration, braking, or turning may cause loss of control. Exercise caution when braking, accelerating, or turning.

When descending a long, steep grade, intermittently apply the brakes. Continuous brake application can overheat the brakes and reduce their effectiveness.

Turning

Turning the amphibian too sharply, at too high a speed, or on a slope could cause you to lose control, overturn or result in passenger ejection.

Practice turning the amphibian at low speed and gradually increase the speed as your ability and confidence increases.

Making a turn on level ground

Turn the handlebars in the direction you want to turn and lean your body into the turn. Leaning into the turn helps to balance the amphibian.

Master turning on level ground before attempting to turn on a slope.

Making a tight turn at low speed

To make a tight turn at low speed, move your body forward on the seat and then lean your body into the turn. Moving your body forward on the seat helps to distribute the weight onto the front wheels to improve steering and front wheel traction.

Turning from a stop

When turning from a stop, gently apply the throttle while leaning into the turn.

Slopes

Always use proper riding techniques to reduce the risk of losing control or overturning the amphibian on slopes.

Note: When riding on steep slopes (ascending, turning, descending or traversing) instruct your passenger to dismount the amphibian first.

Excessively steep slopes

Operating on excessively steep slopes can cause the amphibian to overturn far more easily than when it is being operated on level ground or small hills.

Never operate the amphibian on hills too steep for the amphibian or your abilities. Practice on smaller hills before attempting larger hills.

Ascending a slope

Never ascend slopes that have an excessively slippery or loose surface as these can cause the amphibian to lose traction.

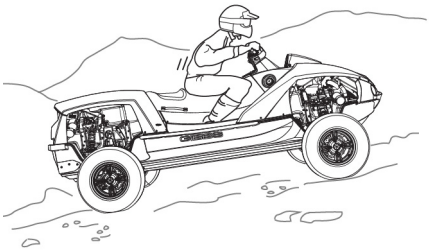

Before ascending a slope, slow down or stop to survey the terrain. When climbing a slope you and your passenger must shift your weight toward the front wheels to help keep them on the ground. Move forward on the seat and lean forward.

To ascend the slope, approach the slope in an appropriate gear and speed for the conditions. Maintain a steady speed as you ascend the slope. Never open the throttle suddenly or make sudden gear changes as this could cause you to lose control of the amphibian or cause the amphibian to flip over backwards.

Never go over the summit of a hill at high speed as there could be unforeseen obstacles or dangers on the other side.

Stalling while ascending a slope

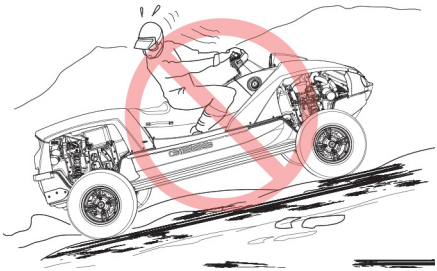

If the amphibian stalls or begins to roll backward on a slope, it may overturn.

If you lose all forward speed or begin rolling backwards, follow this procedure to help prevent flipping over backwards:

- Keep your weight uphill
- Do not apply throttle or change gears suddenly
- Gradually apply the brakes until the amphibian comes to a complete stop.
- Lock the parking brake and dismount uphill of the amphibian (or on one side, if pointed straight uphill). If you are carrying a passenger, have the passenger dismount first.

Seek assistance from another person to help walk the amphibian back down the slope

When walking the amphibian down a slope:

1. Each person should stand with their body facing downhill, beside the amphibian holding the handlebars.

   Make sure you can easily reach and operate the brake lever.
2. Make sure everyone's legs are clear of the wheels and body and that you have a firm footing.
3. Slowly back the amphibian down the hill using the brake lever to control its speed.

Descending a slope

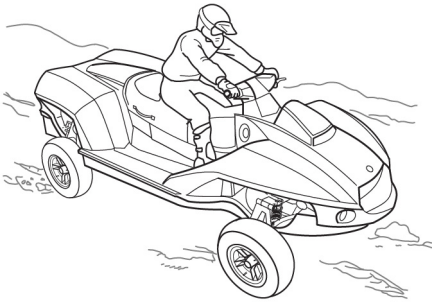

Do not descend a slope at high speed and avoid sudden braking or steering maneuvers as this could cause the amphibian to overturn.

When descending a slope, if the engine speed falls below 2000 rpm, the automatic clutch will disengage and engine braking will no longer be available. Always allow extra distance for braking and apply the brakes to bring the amphibian to a complete stop.

Before descending a slope, slow down or stop to survey the terrain before proceeding.

When descending a slope, it is advisable to proceed with the amphibian pointing straight down the slope. Avoid angles that will cause the amphibian to lean sharply to one side and try to avoid making turns on slope.

Always ride at low speed down a slope. You and your passenger should shift your weight as far back as possible.

Traversing across or turning on a slope

To maintain balance and stability when riding across a slope, you (and your passenger) need to shift weight to the uphill side of the amphibian. Move your body across the seat and lean towards the uphill side.

On slippery or loose surfaces you may also need to steer slightly uphill to maintain a straight course. Try to avoid crossing slopes that are excessively steep, slippery or have a rough terrain.

Do not attempt to turn the ATV on a slope until you have mastered the turning technique. Use caution when turning on any slope.

Obstacles and Rough Terrain

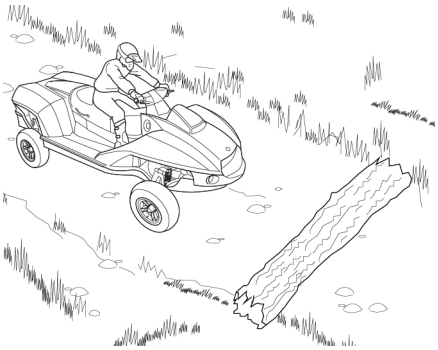

Always use proper riding techniques to reduce the risk of losing control or overturning on rough terrain.

Before riding in an area, check for obstacles and potential hazards. For example, watch out for rocks, tree trunks and pot holes. Snow may cover ice or obstacles that can cause a loss of control. Go slowly and carefully on snow-covered terrain.

Be mindful of the ground clearance of the amphibian. Riding over large obstacles or rough terrain could cause the amphibian to become grounded, which may result in damage to the hull. If in doubt, try to find another way around an obstacle.

Note: If you are carrying a passenger, it may be necessary for the passenger to dismount to increase the ground clearance of the amphibian.

When you approach an obstacle or rough terrain, slow down and be prepared to stop. Never try to ride over large obstacles or try to clear an obstacle at high speed. Riding over obstacles or rough terrain at too high a speed could cause you lose control of the amphibian or even cause it to overturn.

Reverse Operation

Always exercise caution and check behind and to the sides of the amphibian for pedestrians and obstacles before reversing. Take into account that a passenger may obstruct your view. Have your passenger dismount if necessary.

Always ensure you have a good view of the terrain you are reversing over. If in doubt stop and inspect the area first.

Always use a speed suitable for the terrain. The maneuverability of the amphibian is different when reversing and excessive speed may cause you to lose control or overturn the amphibian.

Use caution when reversing over objects, up slopes or when turning.

No Stunts

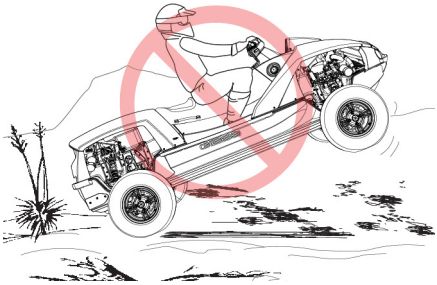

Never attempt stunts like wheelies, or jumps. This type of riding increases the chance of an accident including an overturn. It may also cause damage to the amphibian. Always ride in a safe and responsible manner.

No Towing Other Vehicles

The amphibian must not be used for towing other vehicles or pulling objects.

Parking

Park on level ground whenever possible. Come to a complete stop then apply the parking brake.

Stop the engine, turn the ignition switch to the OFF or LOCK position and remove the key to prevent unauthorized use.

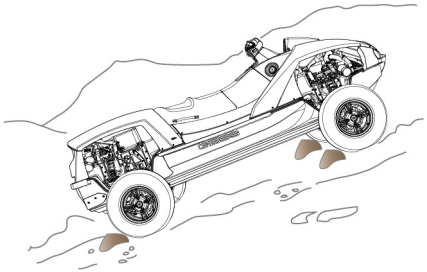

If it is necessary to park on a slope, block all four wheels to prevent rolling (for example, with chocks, rocks or logs) and, if possible, park the amphibian across the slope to prevent it from rolling.

Never park the amphibian on a slope that is too steep to walk up easily.

Recovering the Amphibian on Land

NOTICE Towing the amphibian with the wheels on the ground may cause serious damage to the amphibians engine and drive train.

NOTICE You and your passenger should dismount the amphibian to reduce weight before trying to recover the amphibian.

If the amphibian has become stranded on an obstacle or in a ditch, it is permissible to attach a recovery rope to the following locations to recovery the amphibian onto level ground.

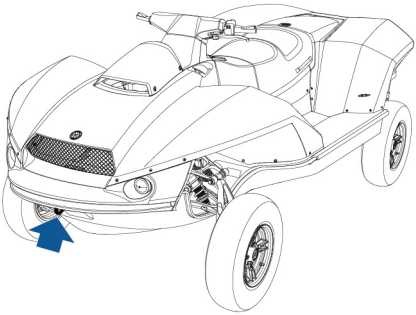

Front eyelet

WARNING! Excessive force on the eyelet could cause it to fail and break free from the hull, potentially striking bystanders.

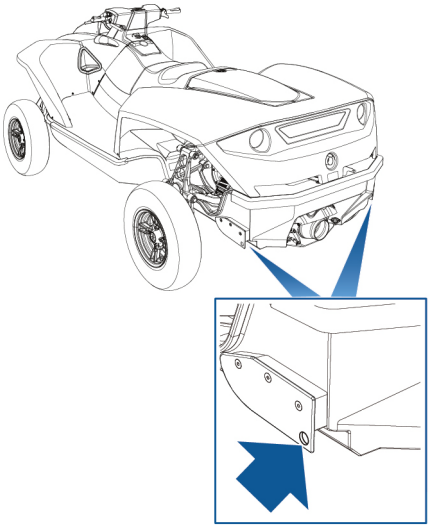

Rear sponson plates

NOTICE These are the only approved positions for attaching a recovery rope to the amphibian. Attaching ropes to the chassis, suspension or other parts of the body can damage the amphibian.

Choosing Water Entry and Exit Sites

To enter the water, it is essential that you locate a suitable entry site and that you have planned where the amphibian is to exit the waterway. If you have any doubts about a chosen access site, locate an alternative site

Always respect local wildlife and ensure that using the selected access point will not have a detrimental effect on the shoreline/river bank. It is your responsibility to minimize damage to the environment.

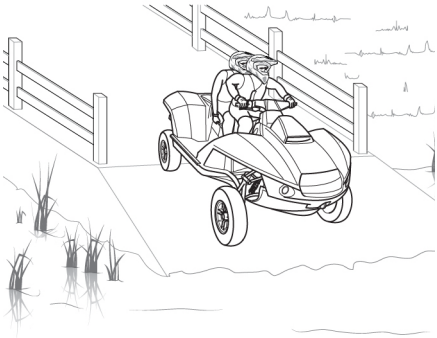

The most suitable and recommended access site is a hard slipway. If one is not available, then choose an entry point into the water that has a firm surface and gradual slope. Be sure that the waterway has sufficient depth for the draft of the hull and is free of underwater hazards and obstacles.

Choose an entry point into the water that has a gradual slope. This is important because as the amphibian enters the water, the front will rise as it starts to float, further reducing the ground clearance at the rear.

WARNING! Do not ride down a steep slope, off an undercut (for example, an eroded river bank,), a dock or other drop-off into the water. Ensure there are no obstacles or hazards at the entry point.

These could cause a loss of control, overturning, hull damage, serious injury or death.

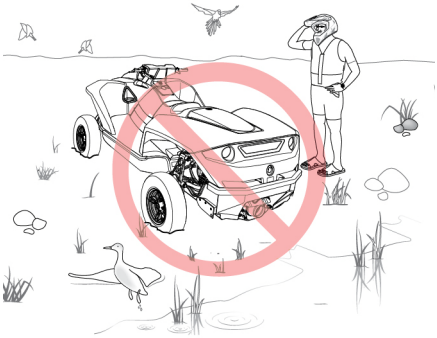

Avoid marshy areas and gravel surfaces. The amphibian can get stuck in marshy ground. If gravel surfaces are encountered, reduce speed to minimize the risk of debris entering the jet intake.

WARNING! Debris in marshy water or small stones on gravel surfaces may be picked up and thrown rearwards by the jet unit, injuring bystanders and causing damage to property or jet unit.

Entering the Water

WARNING! Keep people away when retracting the wheels as they can cut or crush body parts. The intake grate, wheels and other drive parts can entangle long hair, body parts, or other objects (such as ropes, loose clothing, PFD straps). The jet nozzle and rear wheels can throw debris and water rearward.

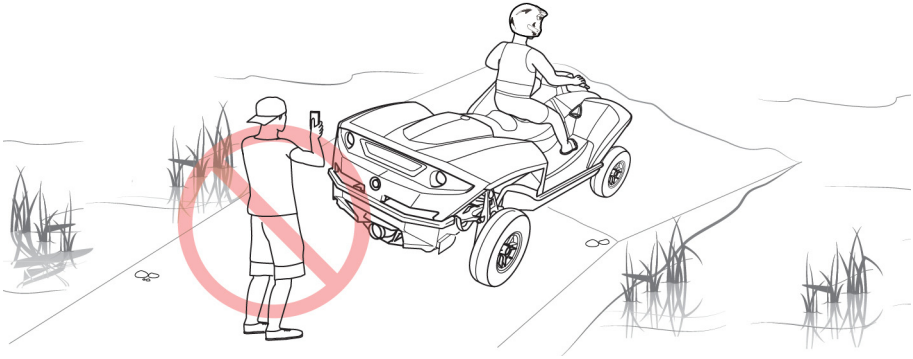

NOTICE Make sure the hull drain plugs are correctly installed before entering the water (see *Hull Drain Plugs, page 77*).

1. As you approach the chosen entrance into the waterway, reduce speed and survey the area for potential hazards. See *Choosing Water Entry and Exit Sites, page 44*.
2. Ensure that the water is deep enough (3 ft [0.9 m] minimum) to allow the suspension to fully raise to the Marine position and allow the amphibian to float free of the bottom.
3. Slowly drive into the water at no more than 4 mph (6 km/h). Keep the engine speed low to prevent water being expelled out of the jet thrust nozzle onto the shore.

   Note: Make sure your passenger is correctly seated and holding on to the grab handles.

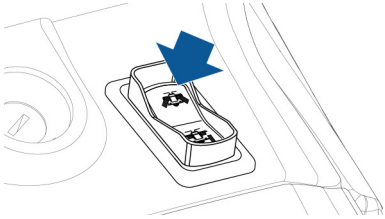

4. When you feel the wheels beginning to float free from the bottom, squeeze the left brake lever then press and momentarily hold the upper half of the suspension switch to retract the wheels.
5. An audible tone will sound while the suspension and wheels move to their Marine position.
6. When the transition process is complete, two short beeps will sound indicating a successful transition. The Marine mode icon will be displayed in the instrument cluster.

7. Confirm that the Marine mode icon is displayed before using the amphibian on water.
8. After you transition to Marine mode, verify that the handlebars turn freely to their full extent.

Exiting the Water

WARNING! Keep people away when deploying the wheels as they can cut or crush body parts. The intake grate, wheels and other drive parts can entangle long hair, body parts, or other objects (such as ropes, loose clothing, PFD straps). The jet nozzle and rear wheels can throw debris and water rearward.

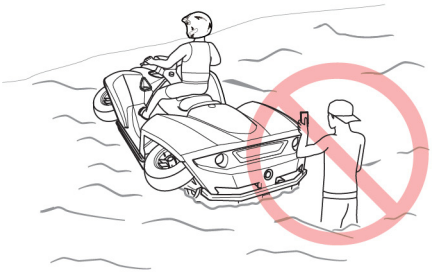

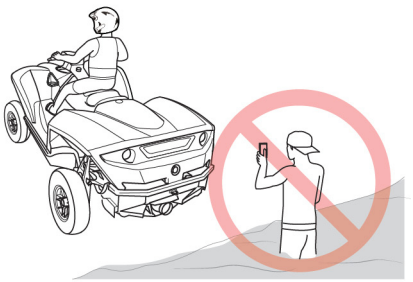

NOTICE The amphibian requires at least 3 ft (0.9 m) of water depth to deploy the wheels to their Land position. If the water is too shallow or a wheel strikes an underwater obstruction, the suspension will not deploy fully and an error will be displayed on the instrument cluster.

1. As the amphibian approaches the chosen exit from the waterway, reduce speed and allow the engine to idle.
2. Make sure that the amphibian is floating in water that is deep enough to allow the wheels to fully deploy to their Land position.

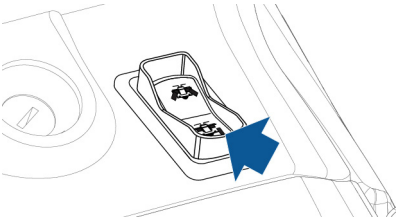

3. Press and momentarily hold the lower half of the suspension switch to deploy the wheels.
4. An audible tone will sound while the suspension and wheels move to their Land position.
5. When the transition process is complete, two short beeps will sound indicating a successful transition. The Land mode icon will be displayed in the instrument cluster.

6. Confirm that the Land mode icon is displayed before riding towards the exit from the waterway.

   Note: If the suspension fails to deploy, a warning message will be display in the instrument cluster. See Suspension fault, page 23

7. Exit carefully and under control. Maintain a speed that will allow the front wheels to ride far enough up the exit way so the rear wheels can gain traction, but not too fast that you compress the suspension and risk damaging the hull. Your amphibian is rear wheel drive only.

   If the amphibian gets stuck, turn the engine off and remove the engine cut-off before dismounting or allowing anyone to help.
8. After exiting the water, drive slowly and apply the brakes lightly several times to dry. Test the brakes by quickly squeezing the lever to check their efficiency.
9. When convenient, open the hull drain plugs and allow any water to drain (see *Hull Drain Plugs, page 77*).

Important

WARNING! Make sure all operators follow the rules for safe operation on water in this section, and any passengers have been instructed in safe riding. Failure to do so can increase the risk of collisions, impact injuries, drowning, injuries from moving parts or jet thrust, and other accidents that can cause severe injury or death.

Learn About On-water Safety and Waterway Rules

It is highly recommended that you complete a boating safety course so you are aware of the fundamentals of good seamanship and watercraft safety. Ensure that you are familiar with local and federal laws and regulations concerning the waterway that you are intending to use.

Always respect the rights of other water users and the environment. Always obey waterway warning and information signs, such as 'No Wake' zones and restricted speed areas. As the 'skipper' of your amphibian, you are responsible for damage caused by your amphibian's wake.

Avoid Hazards While Engine is Running

Do not start the engine or operate the amphibian if anyone is in the water nearby, or near the rear of the amphibian. To prevent accidental starting, always remove the engine safety cut-off or key when boarding the amphibian from the water or during removal of any weeds or debris from the intake grate.

- Keep away from the intake grate while the engine is running. Items such as long hair, loose clothing, ropes or PFD straps can become entangled in moving parts.
- Fast moving water expelled from the jet thrust nozzle can injure people near the rear of the amphibian. In shallow water, debris may also be picked up and thrown rearwards by the jet unit, injuring bystanders and causing damage to property.

Operator Position

Always straddle the seat with a foot in each footwell and both hands firmly gripping the handlebars while riding.

Riding with one hand or your feet incorrectly positioned will reduce the amount of control you have on the amphibian if you need to react to a situation or could cause you to lose balance and fall off.

Passenger Position

WARNING! Never hold on to the operator when riding as the operator may not be able to withstand the lateral force generated by both.

Always straddle the seat with a foot in each footwell and both hands firmly grasping the grab handles on the sides of the seat.

Riding with hands or feet incorrectly positioned could cause you to lose balance and fall off.

Turning

WARNING! Turning sharply at too high a speed may cause passenger ejection.

Do not release the throttle when trying to steer away from objects – **you need thrust to steer**. Maneuverability on water is reduced when the throttle is released and is completely lost when the engine is turned off. A collision could result in severe injury or death.

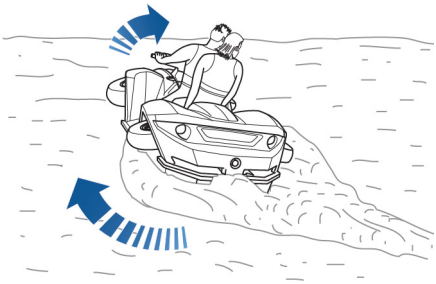

On-water, your amphibian is propelled and steered using a water jet. Turning the handlebars rotates the jet thrust nozzle, controlling the amphibian's direction. Steering control on water depends on the combination of handlebar rotation and thrust from the nozzle. Unlike a car, the amphibian requires some throttle to turn while in Marine mode.

The amount of throttle applied, in addition to handlebar position, will determine how sharply the amphibian will turn. The steering efficiency of the amphibian may also be affected by loading and wind/wave conditions.

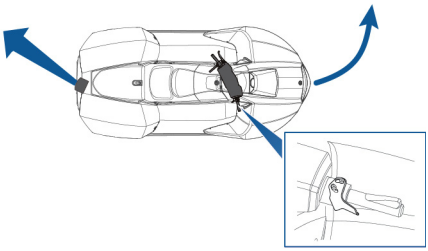

More throttle will produce more thrust from the nozzle and the amphibian will turn more sharply.

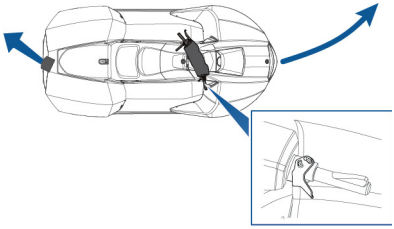

Less throttle will produce less thrust from the nozzle and the amphibian will turn more gradually.

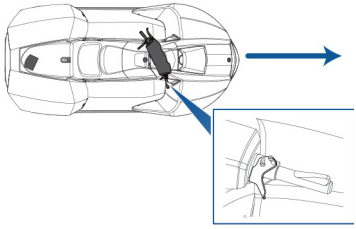

If the engine is shut off while underway, no thrust is produced by the nozzle and directional control is lost. Even with the handlebars fully turned, the amphibian will continue to travel in a straight path if the engine is not running.

Marine Enhanced Steering

Your amphibian is equipped with the GIBBS Marine Enhanced Steering (MES) system which operates whether or not you release throttle.

The MES operates to provide additional engine thrust and turning ability, while operating the amphibian at planing speed, when the rider provides full (or nearly full) steering, but does not use a throttle opening sufficient to provide adequate steering thrust.

While MES provides a reasonable amount of steering, you can turn the amphibian even more sharply by applying the hand throttle when turning the handlebar.

Stopping

On water, your amphibian does not have brakes. The drag from the water will slow the watercraft and bring it to a stop when the throttle is released. The brake lever(s) on the handlebar are for land use only and will have no effect while the amphibian is in Marine mode.

Do not shut off the engine while slowing down, in case thrust is needed to steer away from an obstacle. Do not use the reverse lever to slow the amphibian on water.

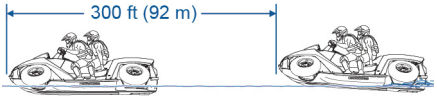

While operating at full speed, the amphibian may require as much as 300 ft (92 m) to stop after the throttle is released. Keep in mind that loading and wind/wave conditions may affect stopping distance.

Always allow yourself plenty of room to stop by keeping a safe distance at all times.

Avoiding a Collision

Do not release the throttle when attempting to steer away from an obstacle. Throttle and jet thrust are required to steer the watercraft. Often the best way to avoid a collision is to maintain throttle and maneuver away from a potential hazard.

Always keep a constant lookout for people, objects, and other watercraft on the water, especially before turning the amphibian. Be alert for conditions that may limit your visibility or block your vision of others.

Do not wake or wave jump, ride the surf line or attempt to spray or splash others with your amphibian. Such actions may cause you to lose control of your amphibian causing a collision or you may misjudge the capabilities of the watercraft and your own riding skills and strike another watercraft, fixed object, or swimmer.

Your amphibian is capable of sharp turns and aggressive maneuvers. Unless it is an emergency, do not attempt such maneuvers with other watercraft nearby, as it will make it hard for others to predict where you are going and may increase the risk of collision.

Even if you have the “right-of-way” according to the Navigation Rules, all operators must take positive action and alter course if a risk of collision exists. Whenever possible, take early and effective action and always operate your amphibian at a safe speed and keep a safe distance away from people, objects, and other watercraft. Avoid areas with submerged objects or shallow water. Do not follow directly behind PWCs or other boats. Remember, generally PWCs and other boats do not have brakes.

Reverse Operation

On-water, the amphibian can be operated in reverse when the reverse bucket is lowered over the jet nozzle. The reverse bucket is lowered by pulling on the Marine reverse lever on the left side of the steering column. When the bucket is lowered and throttle is applied, the bucket re-directs the jet thrust forward moving your amphibian in reverse. The reverse bucket is for low-speed maneuvering only.

Pulling the Marine reverse lever while moving forward can cause abrupt deceleration, which can result in severe injury, death, or amphibian damage. Never attempt to deploy the reverse bucket while traveling at planing speed, or to deploy the reverse bucket as a brake to decelerate the amphibian more quickly.

To shift back to forward operation, simply push the reverse lever forward.

Water conditions

Know the waters in which the amphibian is to be operated. Currents, tides, rapids, submerged obstacles, wakes and waves etc., can affect the safe operation of the amphibian.

It is not advisable to operate in rough water or inclement weather. Try to avoid using the amphibian in these conditions. If you must do so, proceed with caution using minimum speed.

Crossing Waves and Wakes

WARNING! Where possible, do not operate the amphibian in choppy water when carrying a passenger as this can increase the risk of passenger injury or possible ejection.

Do not attempt to jump waves or wakes. Jumping or operating in very choppy water, may cause you to lose control of your amphibian and cause a collision and can increase the risk of striking the handlebar and injuries such as broken bones and back/spinal injuries (paralysis).

When crossing wakes or waves, you should reduce speed as much as possible to reduce jarring. Always be prepared to steer (with throttle) and shift your body weight to maintain balance as necessary. You may want to “post” to absorb any shock with your legs rather than your buttocks and back. “Posting” is a semi-standing posture, commonly used by PWC riders, where your weight is placed on your feet and your knees slightly bent. Always keep a safe distance from other watercraft ahead of you.

Shallow water

Do not operate in shallow water (less than 2 feet of depth). Debris can be thrown rearward by the jet, injuring people or damaging property. Debris can also damage the jet thrust system.

Grounding or impacts with underwater obstructions may cause the amphibian to stop abruptly which could result in personal injury and/or damage to the amphibian. When operating in or near shallow waters, proceed with caution at very low speeds.

Boarding the Amphibian in Deep Water

Ensure that the engine is stopped and the engine safety cut-off is removed before boarding the amphibian from the water.

Note: If riding with a passenger, the passenger should board first. Once aboard, the passenger should then shift their weight to the opposite side of the amphibian while the operator is boarding.

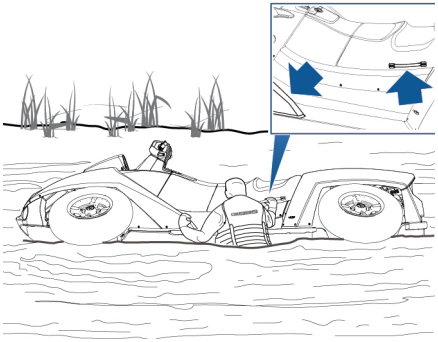

Approach the amphibian from either side and grab the handle on the seat.

Using a combination of pulling on the handle and pushing down on the inside edge of the footwell with your free hand, slide your body up onto the amphibians foot board.

Do not use the wheels to help yourself board. They will spin freely and you could fall or be pinched between the wheel and the amphibian's body.

Do not climb onto the front or rear body panels. They are not designed to support a person's weight.

No Offshore Operation

Do not operate beyond sight of shore. The amphibian is not intended or equipped for operating off shore.

No Nighttime Operation

Never operate on water after dark. The amphibian is not equipped with lighting for nighttime operation on water.

Personal watercraft are typically not permitted to operate at night.

No Anchoring

The amphibian is not designed to be anchored on the water. Do not attempt to anchor the amphibian. Simply drive out of the water and park on land.

No Towing

Do not tow anything with the amphibian. It is not equipped to tow anything, including another vehicle/watercraft, or for watersports (for example, water skiers, wake boarders, tubers).

Practice Exercises

The first time a person operates the amphibian on water, they should practice without a passenger and get familiar with all controls, functions and handling characteristics in a safe area.

Fully familiarize yourself with the controls (and their operation) required for Marine operation (see *Controls, page 14*).

Note: Once you have fully mastered the following exercises, repeat the exercises with a passenger.

Where to practice

Find a suitable area to practice the exercises. Ensure the area meets the following requirements:

- No traffic
- No obstacles
- No swimmers
- No current
- Plenty of space to maneuver
- Adequate water depth

Speeds

As you perform the exercises below, you will operate at increasing speeds. At very low, or "trolling" speeds, the amphibian sits low in the water and produces no wake. At medium, or "sub-planing" speeds, the nose begins to rise and a wake is produced. At higher "planing" speeds, the amphibian will ride higher and more level, skimming the top of the water and producing a wake.

As you increase speed in the turning, stopping and obstacle avoidance exercises, notice how the amphibian rides and performs in each speed range.

Turning

Practice turning in circles in both directions at slow speed. When comfortable with the exercise, increase difficulty by making some figure 8's.

When this is mastered, repeat the above exercises but at increased speed.

Stopping

Practice stopping the amphibian in a straight line at different speeds.

Remember, **the amphibian has no brake on water**. Water drag is the main factor that reduces the watercraft speed and thus the stopping distance.

The brake lever does not stop the amphibian on water. Try applying the brake lever while moving and notice that it does not provide any braking.

Practice stopping the amphibian by turning sharply and applying throttle. Start with slower speeds and gradually increase speed as you get more comfortable with these maneuvers. You will notice that you can stop your forward travel more quickly and in a shorter distance than simply releasing throttle and coasting to a stop in a straight line.

Note: The amphibian's speed, load, current and wind also play an important role in affecting stopping distances.

Reverse

Practice reverse operation. Notice how the amphibian operates in reverse and reacts with steering inputs.

Note: Always perform this exercise at slow speeds.

Avoiding an obstacle

Practice avoiding an imaginary obstacle (choose a virtual point on the water) by steering the watercraft and maintaining throttle. Try this first below planing speed, then increase speed.

Repeat exercise at various speeds, but this time, release throttle while turning. You will notice that steering is reduced with the throttle released. If you provide a full steer input, you will notice the MES system automatically increase engine speed and provide a controlled amount of thrust and steering ability as the amphibian decelerates.

Note: With this exercise, you will learn that you need throttle to steer the watercraft in a different direction.

Deep water boarding

Before practicing, make sure help is available in case you can't re-board in deep water. In calm, chest deep water, bring the amphibian to a stop and remove the engine safety cut-off. Get into the water, then practice climbing back on board. Approach the amphibian from the side and use the handle near the seat.

If you or your passenger are not capable of re-boarding from deep water, you are more likely to be stranded in the water. Plan your rides accordingly, to avoid being stranded.

Things to notice as you begin to ride

As you ride your amphibian in different situations, notice how the following conditions affect how your amphibian behaves and responds:

- Loads
- Currents
- Wind
- Water conditions

Make sure to be alert to these conditions, and adapt accordingly.

Mooring/Docking

CAUTION: Always allow plenty of distance for the amphibian to slow down as you approach your mooring location. Remember the stopping distance will vary depending on speed, water surface condition, presence and direction of wind and current.

CAUTION: Take care to position mooring points and lines so they are not a hazard to dock users. If possible, make them conspicuous with a marker or cover.

Release the throttle as you approach your mooring point and allow the amphibian to slow down. Use small amounts of throttle to maneuver into final position.

If available, suspend boat fenders over the side of the amphibian closest to the dock to prevent damage.

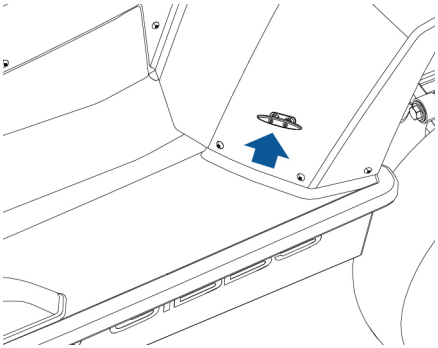

The amphibian has a mooring point located on each side.

Beaching

NOTICE It is not recommended to run the amphibian onto a beach or bank with the wheels raised. Serious damage to the hull and/or jet may result, which will not be covered by the limited warranty.

If it becomes necessary to beach the amphibian, for example if the wheels cannot be deployed, drive slowly towards the beach and shut off the engine before the water is less than 2 ft (0.6 m) deep under the lowest portion of the hull.

NOTICE Always shut off the engine before the water is less than 2 ft (0.6 m) deep to prevent debris being drawn into the jet water intake, and never use the reverse lever.

Pull the amphibian on to the beach.

NOTICE Do not attempt to deploy wheels when beached. The wheels cannot fully deploy when beached. The deployment mechanism can be damaged. To deploy wheels, push the amphibian back into at least 3 ft (0.9 m) of water first.

Recovering the Amphibian on Water

WARNING! Do not ride on the amphibian while it is being towed.

If for any reason it becomes necessary to recover your amphibian from the water by towing, attach a tow rope to the front recovery eye. It may be necessary to enter the water to attach the tow rope, or to have the crew of the rescue boat make the connection.

NOTICE A tow rope should only be attached to the front eyelet of the amphibian. Do not attach the tow rope to any other point on the amphibian - there is a risk of capsizing and serious damage to the amphibian may occur. Aways remove the tow rope after recovery as it may become entangled on the amphibian.

When the amphibian is being towed on water, to minimize any risk of capsizing, always adhere to these basic safety rules:

- Do not attempt to tow your amphibian using any towing point other than the front eyelet.
- Always ensure that the towing vessel maintains a slow and steady speed.
- Ensure that the tow line can be separated from the towing vessel quickly, when being towed. (the breaking strength of the tow line should never exceed 1 ton [1000 kg]).

NOTICE If the tow line used has a greater breaking strength than that of the recovery eye, serious damage to the amphibian could occur.

Righting a Capsized Amphibian

WARNING! Do not exhaust yourself trying to turn the amphibian back upright. If you cannot easily turn the amphibian back upright, climb on top of the hull and wait for rescue. Continue to wear your PFD while waiting.

WARNING! Do not attempt to start the engine when the amphibian is capsized.

The amphibian is designed so that it should not capsize easily. Buoyancy blocks are built into the hull to assist stability. If it does turn over it will not automatically right itself.

To turn the amphibian back upright:

1. Ensure the engine is off and the safety cut-off is removed.
2. Reach across the hull and using the water intake grate as a handhold, pull yourself up onto the amphibian's hull.

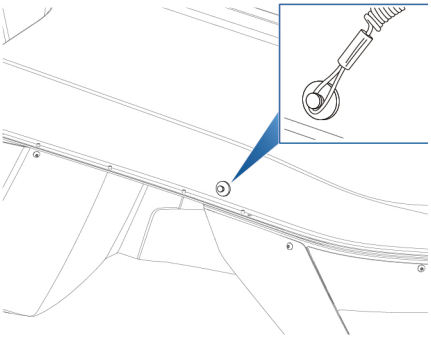

3. Located on the left side of the amphibian is a righting button. Position the righting loop of the lanyard over the righting button.

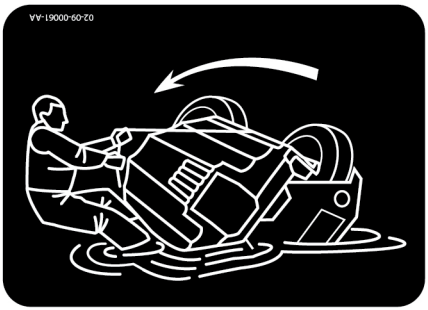

4. Standing on the amphibian's hull and holding onto the lanyard, move backwards to the opposite side of the hull.
5. Lean back and use your body weight to rotate the amphibian towards you.

   Note: Your passenger can assist you if necessary.

NOTICE If the amphibian has been capsized, do not attempt to start the engine to avoid water being drawn into the engine. Have the amphibian towed to land, and contact a Gibbs Sports Amphibians dealer for advice.

As soon as the amphibian is back on land, check for the presence of water in the hull. Remove the hull drain plugs and allow to drain.

Navigation Rules

On-water, your amphibian is classified as a Class A inboard boat and you must follow navigational rules or nautical “rules of the road.” These rules are enforced by the United States Coast Guard as well as local agencies. You should know these rules before getting underway and always follow navigational rules when operating your amphibian.

It is your responsibility to know and follow the navigation rules, which require that you maintain a proper look-out at all times to fully assess the situation and the risk of collision. You should always use common sense and operate your amphibian at a safe speed (appropriate for your skill and prevailing conditions) and at a safe distance from shore, other vessels, swimmers, and fixed objects such as docks. As a general rule, you should keep to your starboard (right) side.

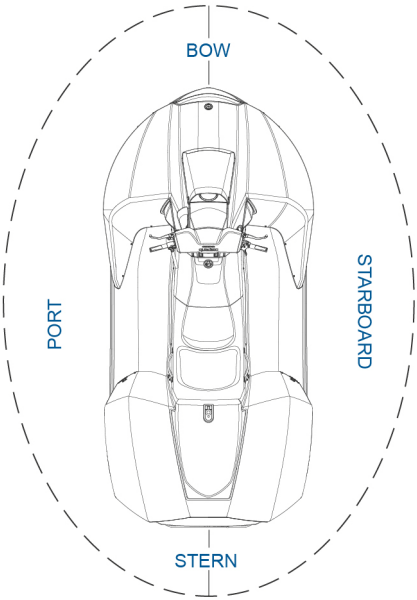

The diagram above will help you become familiar with nautical terminology for the orientation of your amphibian.

This section of the manual provides the basic rules and guidelines that must be followed when operating your amphibian on public waterways. Gibbs strongly recommends that operators take a boater safety course from the Coast Guard Auxiliary, the U.S. Power Squadron, or similar group recommended by your State Boating Law Administrator before operating the amphibian on water. These groups can provide you with more detailed training on safety, piloting, and navigation.

When two boats encounter one another on the water the navigation rules dictate which vessel (if any) has the right of way and what actions the vessels are required to take when they meet. In nautical terms, the vessel with the right-of-way is called the “stand-on” (or “privileged”) vessel and the vessel which does not have the right-of-way is called the “give-way” (or “burdened”) vessel.

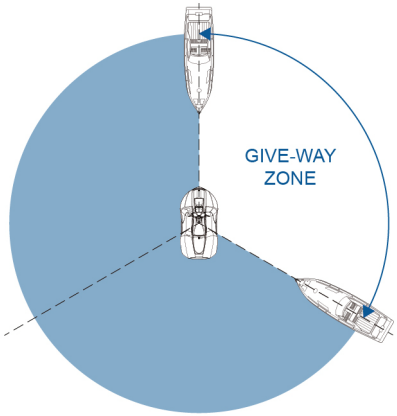

The illustration above indicates the “give-way” zone, relative to your amphibian, which is shown in the center of the diagram. You should give the right-of-way to all vessels to your starboard side in the “give-way” zone.

There are three main situations that typically occur when you encounter another vessel: Meeting, Crossing, and Overtaking. Failure to follow the navigation rules when you encounter another vessel could lead to a collision.

Meeting

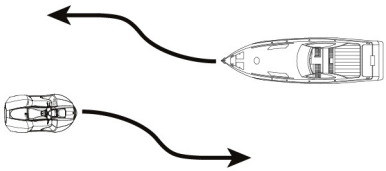

Meeting is the term given when two vessels are approaching one another in a head-on or nearly head-on situation. In a meeting situation, neither vessel has the right-of-way. Both vessels should alter course to starboard to avoid a collision and you should keep the other vessel on your port (left) side keeping a safe distance between the vessels. This rule does not apply if the vessels will clear one another by a safe distance by continuing on a set course and speed.

Crossing

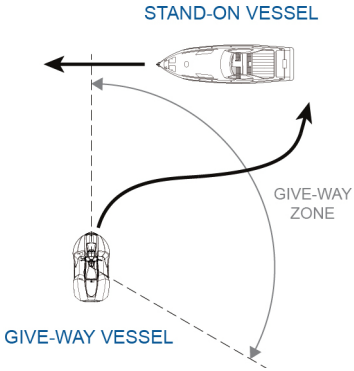

Whenever two vessels are crossing paths close enough that there is a risk of collision, you are the “give-way” vessel if the other vessel is on your starboard (right) side. As the “give-way” vessel you should keep out of the way and avoid crossing ahead of the other vessel if possible. If the other vessel is on your port (left) side, you are the “stand-on” vessel and you should maintain your course and speed as long as the other vessel gives you the right of way. A simple way to remember this is “A vessel to your right has the right-of-way.”

Overtaking (Passing)

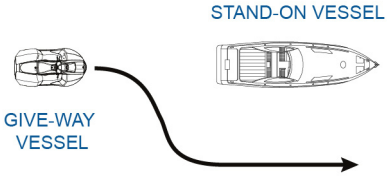

If you are passing another vessel from the stern, you are the “give-way” vessel and are expected to keep clear and pass the other vessel at a safe distance until you are clear. If you are the vessel being passed, you are the “stand-on” vessel and you should maintain your course and speed to allow the other vessel to safely steer around you.

Non-powered Boats

Sailboats, canoes, and other boats which are not under power, have the right-of-way over power boats in nearly all situations. Always stay clear of these vessels and do not create a wake which may cause them trouble.

Navigation aids

Navigational aids, such as signs or buoys, can assist you in identifying safe waters. Buoys will indicate whether you should keep to the right (starboard) or to the left (port) of the buoy, or to which channel you can continue.

They may also indicate whether you are entering a restricted or controlled area such as a no wake or low speed zone. Additionally they may indicate potential hazards or other pertinent boating information.

Note: The markers may be located either on shore or on the water.

Make sure you know and understand the navigation system applicable to the waterways where you intend to use the amphibian.

Post-operation

If you operated on water, open the hull drain plugs and allow any water to drain (see *Hull Drain Plugs, page 77*).

Thoroughly wash the amphibian with fresh water to remove any mud off your vehicle, pay particular attention to the water intake and jet nozzle. See *Cleaning, page 79*.

If you operate on or near salt water, make sure the wheel arches, suspension components, water jet and wheel assemblies are thoroughly washed in fresh water.

Periodically remove the upper body panel and rinse the engine compartment with fresh water using a hose.

General Information

WARNING! Failure to maintain the amphibian in accordance with the maintenance schedule and procedures outlined in this Manual may make the amphibian unsafe to ride and invalidate the Limited Warranty.

The safety, reliability and performance of your amphibian will depend partly on how well it is maintained. Maintenance is the owner's responsibility and you must ensure that the appropriate maintenance is performed when required and according to the recommendations specified by Gibbs Sports Amphibians.

Scheduled Servicing

Note: If the amphibian is operated primarily or frequently in very dusty conditions or in low or very high temperatures, more frequent servicing and different oil and coolant specifications may be necessary. Contact a Gibbs Sports Amphibians dealer for advice.

Regular scheduled servicing must be carried out after every 50 hours of use by a Gibbs Sports Amphibians dealer, refer to *Maintenance Schedule, page 61*.

A yellow indicator light will illuminate in the instrument cluster when a service is due.

Arranging a service

Give your dealer as much notice as possible for any service or repair so that a mutually convenient time can be arranged. When contacting your dealer, provide as much information as possible about any concerns you have with your amphibian.

Owner Maintenance

WARNING! Unless specifically instructed otherwise, all owner maintenance procedures should be carried out with the engine off and the engine safety cut-off removed.

In addition to scheduled servicing the following checks should be carried out by the owner prior to each use of the amphibian:

Check
Operation of lights, instrument and warning indicators
Operation of brakes
Indications of fluid leaks or loose parts
Condition of hull and seals
Engine oil level
Coolant level
Fuel level
Tire pressures

NOTICE Any significant or sudden drop in fluid levels, or uneven tire wear should be rectified immediately.

Maintenance Safety

WARNING! Gasoline vapors can explode. Before starting the engine, operate the ventilation blower for 4 minutes by turning the ignition key to the ON position. Remove the seat and check the engine compartment for gasoline vapors.

WARNING! Never leave the engine running in an unventilated area - exhaust gases are poisonous and extremely dangerous.

WARNING! Keep your hands and clothing away from rotating components and cooling fans. Some fans may continue to operate for 30 seconds or more after the ignition is turned OFF.

WARNING! Remove wrist bands and jewelry, before working in the engine compartment.

WARNING! When filling-up fluid reservoirs, position a cloth around the neck of the reservoir to absorb any fluid spillage which could result in a fire.

WARNING! Never leave any objects, tools, or cleaning rags in the bilge or engine compartment. These could either cause damage to the amphibians components or are a potential source for a fire.

WARNING! If the amphibian has been ridden recently, do not touch any exhaust or cooling system components until they have cooled.

Poisonous fluids

WARNING! Fluids used in the amphibian may be poisonous and should not be consumed or brought into contact with open wounds. These fluids include; antifreeze, brake fluid, gasoline and engine oil. For your own safety, always read and obey all instructions printed on fluid container labels.

Used engine oil

CAUTION! Prolonged contact with engine oil may cause serious skin disorders, including dermatitis and cancer of the skin. Always wash thoroughly after contact.

It is illegal to pollute drains, water ways or soil. Use authorized waste disposal sites to dispose of used oil and other fluids from the amphibian.

Fuel and Emission Systems Components

Emission control

Your amphibian is designed with a variety of emission and evaporative control equipment, designed to meet specific regulatory requirements. You should be aware that unauthorized replacement, modification or tampering with this equipment by an owner or repair shop, may be unlawful and subject to legal penalties.

In addition, engine settings must not be tampered with. These have been established to ensure that your amphibian complies with stringent exhaust emission regulations.

NOTICE Incorrect engine settings may adversely affect exhaust emissions, engine performance and fuel consumption, as well as causing high temperatures, which may result in damage to amphibian.

Fuel system

WARNING! Under no circumstances should any part of the fuel system be dismantled or replaced by anyone other than a suitably qualified technician. Failure to comply with this instruction may result in fuel spillage with a consequent serious risk of fire.

WARNING! Keep sparks and open flames away from the engine compartment.

Maintenance Schedule

The core content for each service is indicated under the 50 hour service interval. In addition to this core content, additional procedures may be required to be performed according to the specific service intervals requirements.

	Interval (Total Operating Hours)				
Service Task	**10**	**50**	**100**	**200**	**250**
Air filter	C			R	
Battery			C		
Brake fluid		C			
Brake pads - front and rear		C			
Corrosion preventative sealant		+			
Drive chains and sprockets		C/A			
Drive belt - Power Transfer Unit (PTU)		C/A/R			R
Engine coolant					R
Engine oil and filter	R	R			
Exhaust system		C			
Exhaust spark arrestor			C		
Fuel system inspection and pressure test		C			
Fuel tank vent		C			
Lubrication		C			
Synchronizer / Differential fluid		R			
Reverse bucket adjustment		C			
Run diagnostics		C			
Shift solenoid adjustment		C			
Spark plugs			R		
Steering alignment (Land and water)		C			
Suspension front		C			
Suspension rear		C			
Tire pressures		C			
Tire rotation			C		
A = Adjust **C** = Check **R** = Replace **+** = Apply every 50 hours if the amphibian is used regularly on or near salt water.					

NOTICE: Some of the items listed in the Maintenance Schedule can be performed using basic hand tools and the procedures for these items are provided in this Owner's Manual. Other items may require special training, tools or equipment. We recommend that servicing of the Amphibian is performed by a Gibbs Sports Amphibians dealer or a qualified technician, unless you have the required mechanical skills and equipment.

Detailed procedures for all items listed in the Maintenance Schedule are provided in the ***GIBBS Quadski Service Manual***.

Component Locations

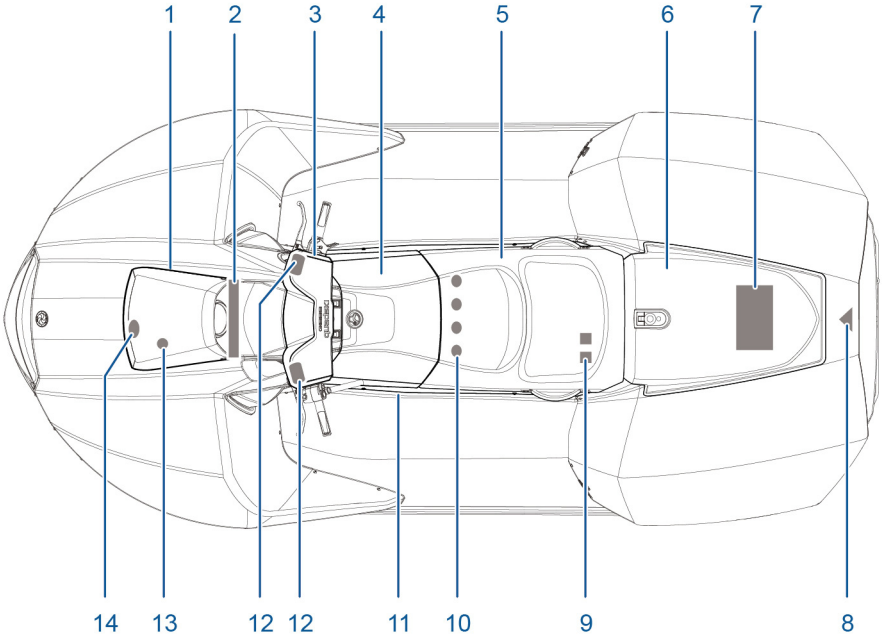

1. Maintenance hatch
2. Air filter
3. Handlebar pad
4. Front storage compartment
5. Seat
6. Rear storage compartment
7. Battery
8. Exhaust spark arrestor
9. Fuse boxes
10. Spark plugs
11. Upper body panel
12. Brake fluid reservoir(s)
13. Engine oil reservoir
14. Engine coolant reservoir

Air Filter

Note: The air filter may require replacing more frequently than specified in the service schedule if the amphibian is regularly operated in dusty and/or sandy conditions.

Removal

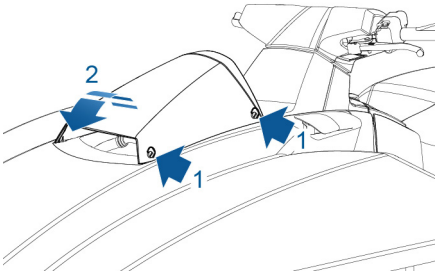

1. Remove thumbscrews (x4) securing forward hatch to body.
2. Remove maintenance hatch.
3. Remove the front storage compartment cover. See *Front Storage Compartment, page 25*.

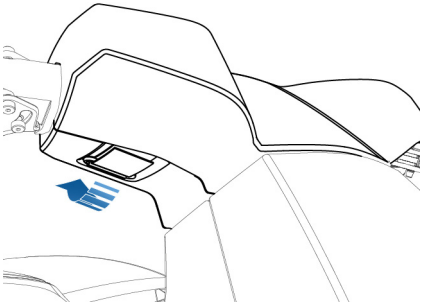

4. Release the two straps on the underside of the handlebar pad securing the pad to the handlebars.
5. Carefully remove the pad from the handlebars.

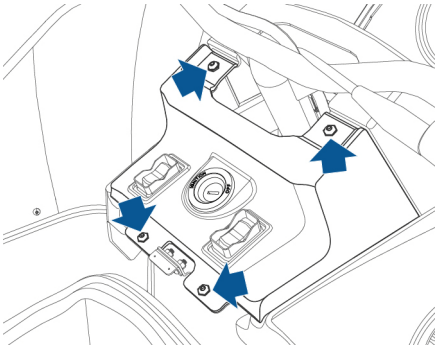

6. Remove the four screws securing the console rear panel to the amphibian.

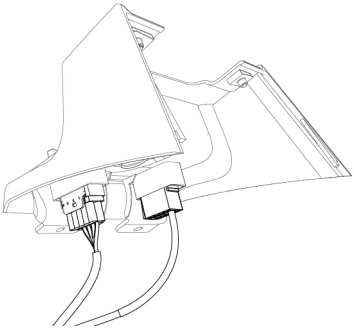

7. Raise the panel and disconnect the two connectors from the rear of the suspension and light switches.
8. Remove the console rear panel.

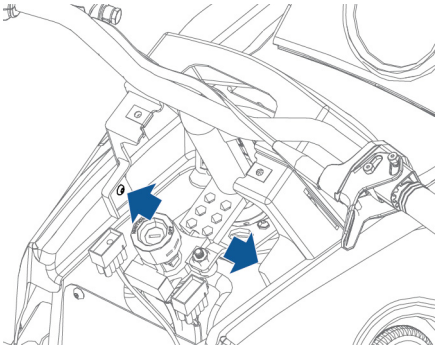

9. Remove screws (x2) securing the console center panel to the amphibian.

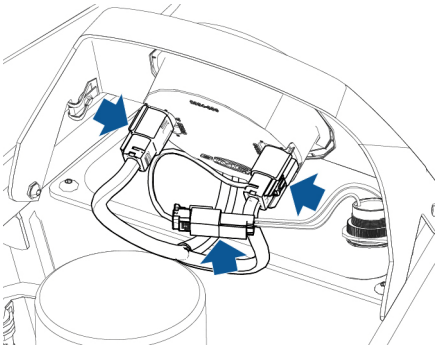

10. Slide back protective covers (x2) for access to instrument cluster connectors.
11. Disconnect connectors (x2) from the instrument cluster and the warning buzzer.

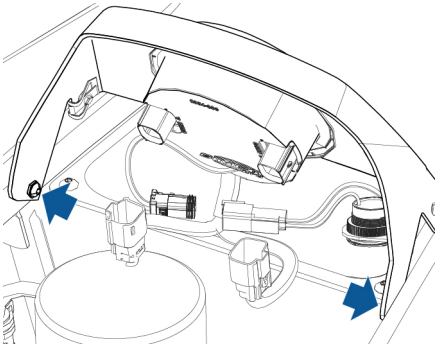

12. Remove screws (x2) securing the console center panel to the amphibian.
13. Remove console center panel.

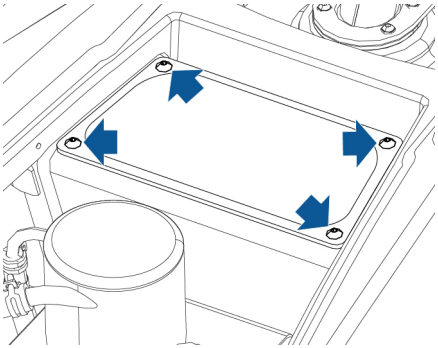

14. Remove four screws securing the air filter access panel to the amphibian.
15. Remove access panel.

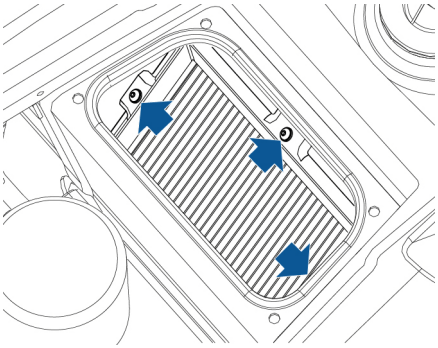

16. Remove three turnbuckles securing the air filter to the air intake.
17. Remove and replace the air filter.

Installation

Installation is the reverse of the removal procedure.

NOTICE Do not over tighten the retaining screws as it may damage the body panels.

Engine Oil

NOTICE If any significant or sudden drop in oil level is noted you should seek qualified assistance immediately.

NOTICE Your amphibian's warranty may be invalidated if damage is caused by the use of improper engine oil. Failure to use an oil that meets the required specification could cause excessive engine wear, a buildup of sludge and deposits and increased pollution. It could also lead to engine failure.

NOTICE Do not use oil additives of any type as engine damage could occur. Use only specified lubricants.

Checking the oil level

The oil level must only be checked when the engine is at its normal operating temperature.

Ride the amphibian for at least 10 minutes. Turn off the engine and let it stand for five minutes prior to checking the oil level.

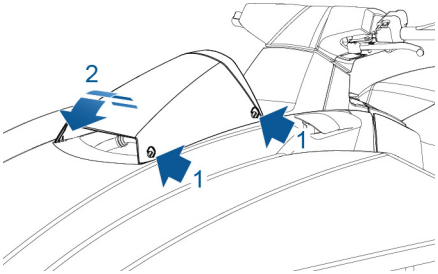

1. Remove thumbscrews (x4) securing forward hatch to body.
2. Remove forward hatch.

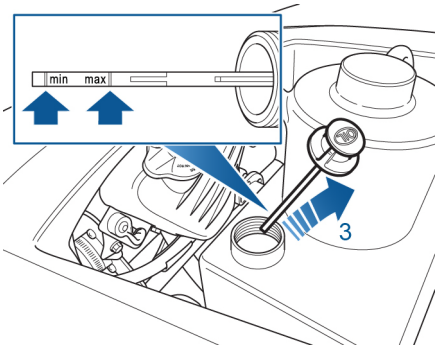

3. Unscrew and withdraw the dipstick and wipe the blade clean with a lint free cloth.
4. Fully re-insert the dipstick and withdraw again to check the oil level.

Never allow the oil level to fall below the **MIN** mark on the dipstick.

Adding engine oil

NOTICE Overfilling with oil could result in severe engine damage. Oil should be added in small quantities and the level re-checked to ensure that the engine is not overfilled.

1. Add the recommended engine oil to maintain the level between the **MIN** and **MAX** marks on the dipstick. See *Approved Fluids and Capacities, page 90*.
2. Check the oil level again after five minutes.
3. Once the correct level is achieved, replace the filler cap and securely tighten by hand.
4. Wipe up any spilled oil.

Engine oil and filter replacement

Replacement of the engine oil and filter require access to special tools and should be entrusted to a Gibbs Sports Amphibians dealer.

Used engine oil disposal

It is illegal to pollute drains, water ways or soil. Use authorized waste disposal sites to dispose of used oil and other fluids from the amphibian.

Engine Coolant

WARNING! Do not remove the reservoir cap when the engine is hot - escaping steam or coolant could cause serious injury.

WARNING! Antifreeze is poisonous - keep out of reach of children. Wash any spillage to the eyes or skin immediately. In the event of accidental swallowing, get medical help immediately.

NOTICE Never add coolant into the system when the engine is hot. Always allow the system to cool first.

Checking the coolant level

Only check the coolant level when the engine is cold.

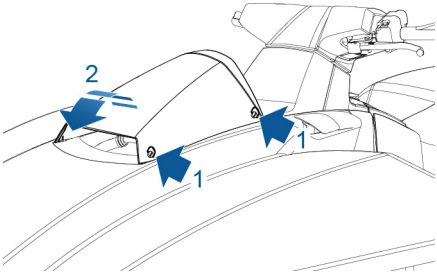

1. Remove thumbscrews (x4) securing forward hatch to body.
2. Remove forward hatch.

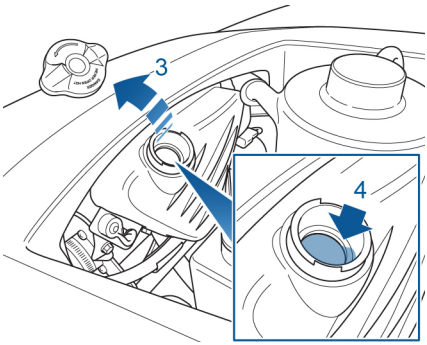

3. Rotate the reservoir expansion cap 90° counter-clockwise and remove the cap.
4. Visually check the level of the coolant in the reservoir. The coolant should cover the white plastic bridge inside the reservoir.
5. If necessary, adjust the level by adding coolant to the reservoir. Use a funnel to prevent spillage.

   NOTICE If the level has fallen appreciably, a leak may have occurred which could cause the engine to overheat. Contact a Gibbs Sports Amphibians dealer.
6. Replace the cap and fully tighten after filling-up.

Antifreeze

Antifreeze contains important corrosion inhibitors specifically formulated to help protect the internal components of the engine.

Always use the correct specification antifreeze and maintain the antifreeze content of the coolant all year round. See *Approved Fluids and Capacities, page 90*.

NOTICE Coolant must be changed every four years. Additives and rust inhibitors are not recommended - they could cause permanent damage to the engine.

Coolant replacement

The coolant must be replaced every four years regardless of the distance the Quadski has been ridden. It is recommended that this procedure is carried out by a qualified technician.

Brake Fluid

WARNING! Brake fluid is highly toxic - keep containers sealed and out of the reach of children. If accidental consumption of fluid is suspected, seek medical attention immediately.

WARNING! Seek qualified assistance immediately if brake lever travel is unusually long, lever feel is spongy or if there is any significant loss of brake fluid. Riding under such conditions could result in extended stopping distances or complete brake failure.

CAUTION! If the fluid comes into contact with the skin or eyes, rinse immediately with plenty of water.

Your amphibian is equipped with a front and rear hydraulic braking system.

The fluid level may drop slightly during normal use, as a result of brake pad wear, but should not be allowed to drop below the **MIN** mark.

Checking the brake fluid level

Check the fluid level with the vehicle standing on level ground.

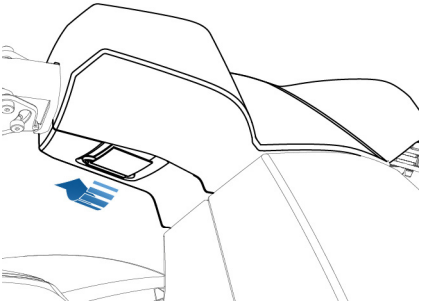

1. Release the two straps on the underside of the handlebar pad securing the pad to the handlebars.
2. Carefully remove the pad from the handlebars.

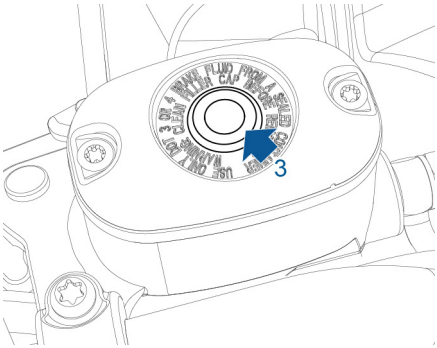

3. Check the fluid level of the brake fluid reservoir through the sight glass. The fluid should be clear and at a level at or near the top of the sight glass.
4. Add brake fluid if necessary.

Filling up the brake reservoir

WARNING! Only use new fluid from an airtight container. Fluid from open containers or fluid previously bled from the system will have absorbed moisture, which will adversely affect performance, and must not be used.

NOTICE Brake fluid will damage plastic or painted surfaces. Soak up any spillage with an absorbent cloth immediately and wash the area with a mixture of car soap and water.

1. Clean the filler cap with a clean, dry cloth before removing, to prevent dirt or moisture from entering the reservoir.
2. Remove two screws securing filler cap to reservoir.

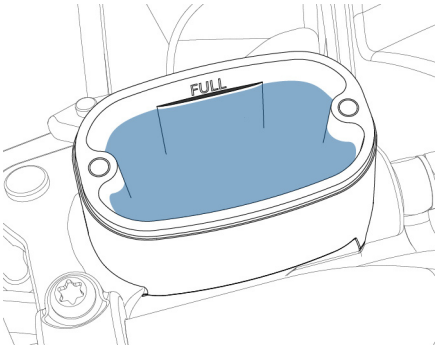

3. Fill the reservoir using an approved brake fluid until the fluid is level with the ridge on the reservoir body. See *Approved Fluids and Capacities, page 90*.
4. Replace the filler cap

Brake fluid replacement

Brake fluid must be replaced every two years regardless of the distance the Quadski has been ridden. It is recommended that this procedure is carried out by a qualified technician.

Seat

WARNING! Riding with a loose or incorrectly installed seat could cause you to crash and be seriously injured.

Removal

1. Open the rear storage compartment.

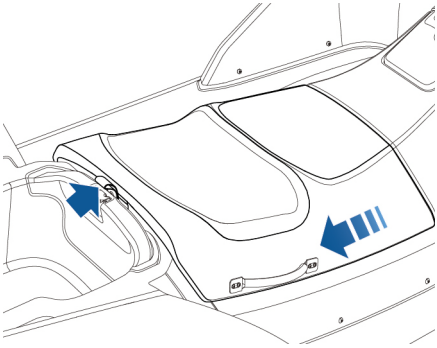

2. Pull up on the seat release strap and lift the rear edge of the seat.
3. Slide the seat rearwards to release from the mounting bracket and remove.

Installation

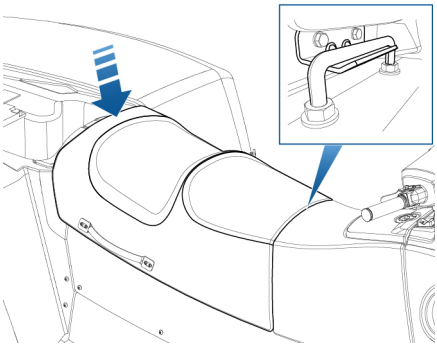

1. Position the seat on the amphibian and insert the seat tongue underneath the mounting bracket.
2. Push on the rear of the seat to engage the seat retaining latch.
3. Check that the front and rear edges of the seat are firmly secured to the amphibian.

Upper Body Panel

Removal of the upper body panel provides greater access to the engine for servicing and maintenance.

Removal

1. Remove the front storage compartment cover. See *Front Storage Compartment, page 25*.
2. Remove the seat from the amphibian. See *Seat, page 68*.

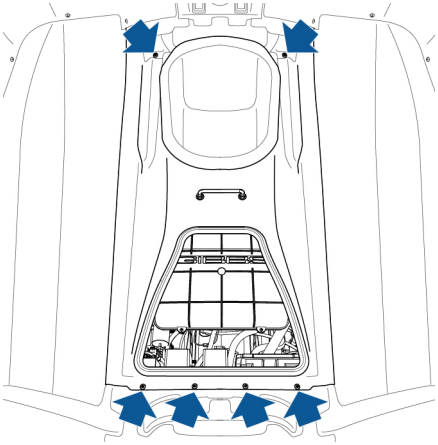

3. Remove the six screws securing the top of the upper body panel to the amphibian.

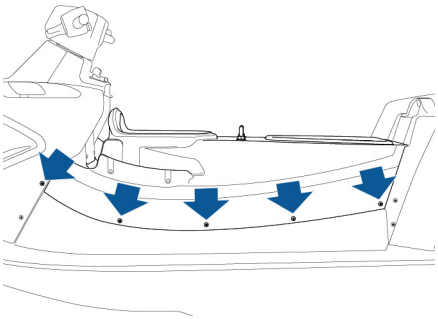

4. Remove the five screws securing the left side of the upper body panel to the amphibian.
5. Remove the five screws securing the right side of the upper body panel to the amphibian.
6. Lift the rear edge of the upper body panel and slide the panel rearwards to release it from the amphibian.
7. Remove the upper body panel.

Installation

Installation is the reverse of the removal procedure except for the following:

1. Position the upper body panel on the amphibian. Loosely install all retaining screws to ensure the panel is correctly aligned, then tighten all screws.

NOTICE Do not over tighten the retaining screws as it may damage the body panel.

Spark Plugs

Note: Removal of the spark plugs requires the removal of other engine components. We recommend that this procedure be carried out by a qualified technician.

Removal

1. Remove the upper body panel. See *Upper Body Panel, page 69*.

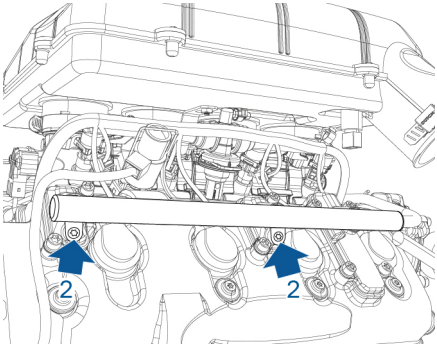

2. Remove two Torx screws securing the secondary air line to the cylinder head.
3. Carefully release the secondary air line from the cylinder head and position aside.

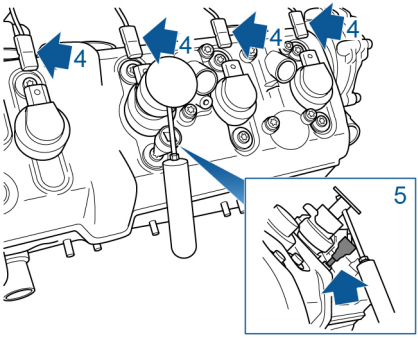

4. Disconnect the harness connector from the ignition coil.
5. Using the Gibbs service tool, pull on the ignition coil to release it from the spark plug.
6. Withdraw the spark plug cap and ignition coil assembly from the cylinder head.
7. Using a spark plug wrench, loosen and remove the spark plug.
8. Repeat steps 4, 5, 6 and 7 for the other three spark plugs.

Adjust

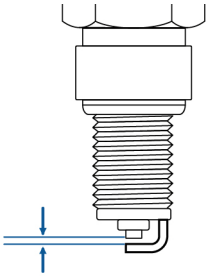

Prior to installation, use a wire feeler gauge to set the electrode gaps of the spark plugs to the required specification. See *Engine Management System, page 87*.

Installation

1. Make sure the threads of the spark plugs are clean, then apply an anti-seize lubricant to the threads before installing.
2. Install the spark plugs and tighten to 20 Nm. Do not over tighten.
3. Fit the spark plug ignition coils.
4. Clean and lubricate the seals on the secondary air line.
5. Carefully install the secondary air line on to the cylinder head. Make sure the seals are correctly seated on the cylinder head intakes.
6. Install the two Torx screws securing the secondary air line to the cylinder head.
7. Install the upper body panel on the amphibian.

Exhaust Spark Arrestor

Removal

1. Remove the upper body panel. See *Upper Body Panel, page 69*.
2. Remove the battery. See *Battery, page 73*.

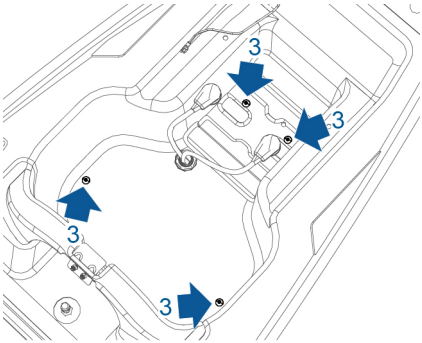

3. Remove the four screws securing the rear body panel to the amphibian.

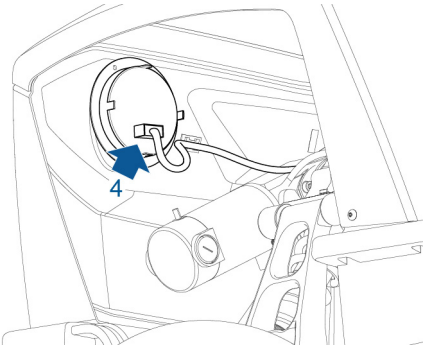

4. Disconnect the harness connector from each tail light and remove cable tie securing harness to body panel.

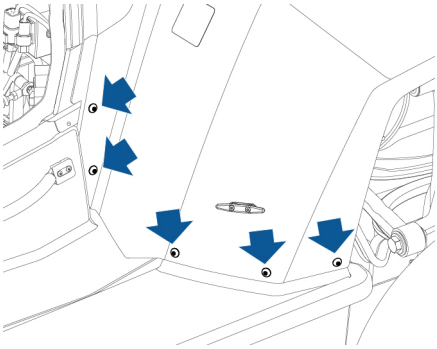

5. Remove the five screws securing the LH side of the rear body panel to the amphibian.
6. Remove the five screws securing the RH side of the rear body panel to the amphibian.

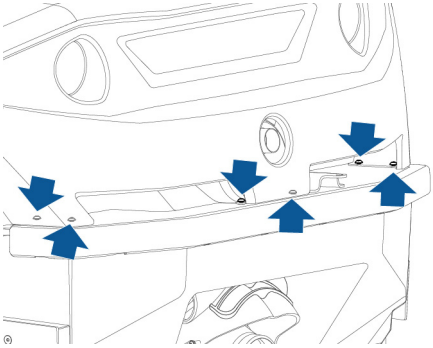

7. Remove the six screws securing the rear body panel to the amphibian.
8. Using assistance, lift the rear body panel from amphibian.

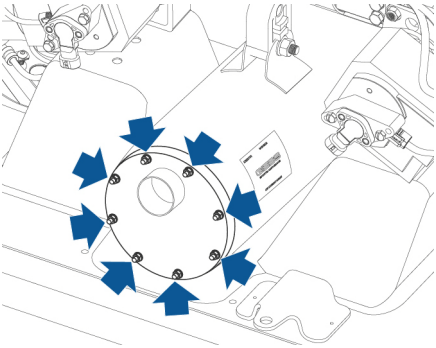

9. Remove the eight nuts and washers securing the end cap to the muffler.
10. Remove the end cap from the muffler.
11. Slide the spark arrestor from the end of the muffler.

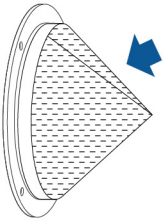

12. Carefully clean the spark arrestor to remove any accumulation of debris. For best results use an air hose or rinse under running water.

    Note: Take care not to damage the fine mesh of the arrestor screen.

Installation

1. Clean the mating faces of the end cap, spark arrestor and muffler.

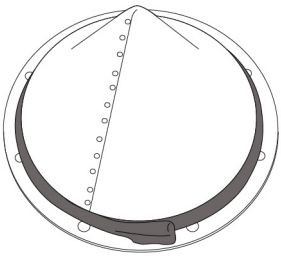

2. Wearing gloves, apply a continuous bead of Deacon 3300 high temperature gasket compound to the spark arrestor. Start at a point between two stud holes and overlap the ends of compound by approximately 10mm.
3. Lightly press down on the gasket compound to make sure it is adhered to the spark arrestor. Use a knife to remove any excess compound where the ends overlap.
4. Position the spark arrestor onto the muffler studs with the seam in the spark arrestor screen located at the bottom.
5. Carefully press the spark arrestor into position on the muffler. Make sure the spark arrestor is located squarely on the muffler with no gaps in the gasket compound.

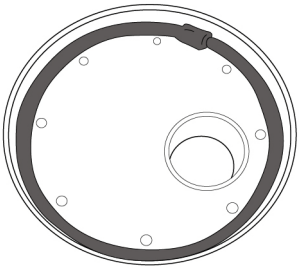

6. Apply a continuous bead of Deacon 3300 high temperature gasket compound to the inside of the muffler end cap. Start at a point between two stud holes and overlap the ends of compound by approximately 10mm.

7. Lightly press down on the gasket compound to make sure it is adhered to the end cap. Use a knife to remove any excess compound where the ends overlap.
8. Clean the threads of the studs on the muffler and apply a drop of Loctite 242 thread locker to each of the studs.
9. Position the end cap on the muffler with the exhaust outlet at the top.
10. Using a rubber mallet, gently tap the end cap into position.

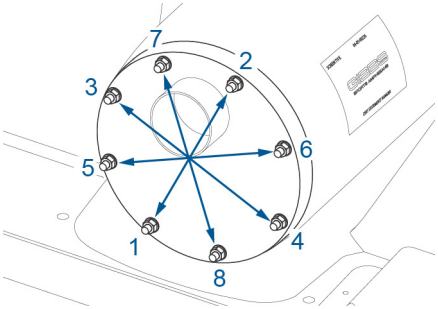

11. Install a washer and locknut onto each stud then use a diagonal sequence to gradually tighten each nut until the end cap is fully seated.
12. Once the end cap is fully seated, loosen each locknut and then torque, using the diagonal sequence, to 4.6 Nm.
13. Continue reassembling the amphibian in the reverse order to how it was disassembled.

    NOTICE Do not over tighten the retaining screws as it may damage the body panel.

Battery

WARNING! The battery contains sulfuric acid and can emit explosive mixtures of hydrogen and oxygen. Always store in a well ventilated area.

WARNING! Do not allow any open flames, or other sources of ignition near the battery as it may cause an explosion.

WARNING! Always wear safety glasses or a face shield when working on or near the battery

WARNING! Do not allow the battery electrolyte (fluid) to come into contact with your skin or eyes. It is both corrosive and toxic, and the resulting injuries can be severe. If any electrolyte comes into contact with your skin or eyes, rinse the affected area immediately with clean, cold water and seek medical advice.

WARNING! Make sure metal tools or jewelry do not make contact with battery terminals - the resultant short circuit and sparking may cause personal injury or damage to the electrical system.

Removal

1. Open the rear storage compartment.
2. Remove the fire extinguisher.

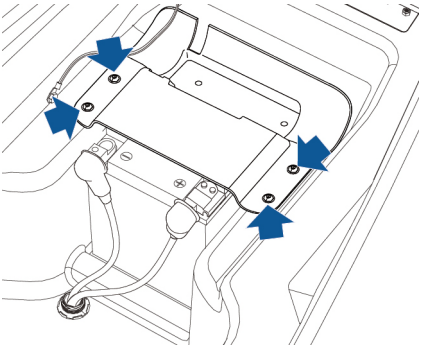

3. Remove the four screws securing the battery clamp to the body.
4. Remove the battery clamp.

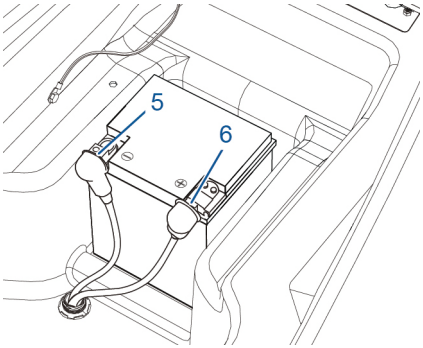

5. Remove the screw securing the negative cable to the battery and position aside.
6. Remove the screw securing the positive cable to the battery.
7. Remove the battery from amphibian.

Installation

Installation is the reverse of the removal procedure and adhere to the following:

- Only fit a replacement battery of the same specification and size as the original.
- Make sure the battery leads are connected to the correct terminals.

Charging

NOTICE To avoid damaging the amphibian's electrical system, always remove the battery before charging.

Proper charging is important since overcharging or undercharging will damage the battery. Always use an automatic temperature sensing voltage-regulated charger set to 14.4-14.6V at 68°F (20°C).

The only way to determine the State of Charge (SoC) of the battery is by using a voltmeter.

Disconnect the battery charger and wait 24 hours to allow the voltage to stabilize before measuring the voltage.

Note: A 100% SoC is indicated by a voltage of 12.8V or greater.

Battery disposal

Batteries are hazardous waste. Safely dispose of used batteries at an authorized recycling center.

Fuses

To access the fuse boxes, remove the seat. See *Seat, page 68*.

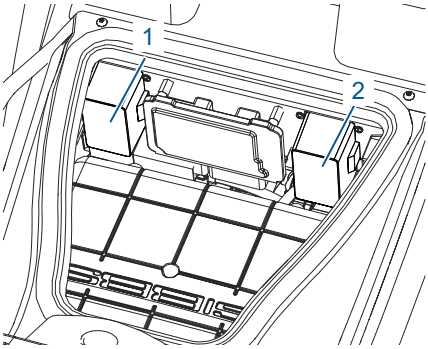

1. Fuse box 1
2. Fuse box 2

Depress the two clips and pull to remove a fuse box cover.

Note: The fuse box covers are retained by a strap to the body to prevent them falling into the engine compartment.

Fuses protect the amphibian's electrical systems from damage; the failure of any fuse will render the equipment it protects inoperative. In the event of an electrical failure, remove the appropriate fuse and check for a break in the wire inside the fuse.

Note: The fuse box has a rubber seal around the perimeter to prevent the ingress of water. When refitting the covers, make sure this seal is correctly installed.

Replacing a fuse

WARNING! Damage to the amphibian's electrical systems, or personal injury could result from fitting a replacement fuse that exceeds the amperage of the original.

Before removing a fuse, turn off the ignition switch and all electrical equipment.

Ensure that any replacement fuse conforms to the amperage of the fuse being replaced. If in doubt, check with the specification chart on the following pages.

Note: If a replacement fuse fails to cure an electrical failure, or the replacement fuse fails prematurely, the problem should be referred to a qualified technician.

Fuse Specifications - Fuse Box 1

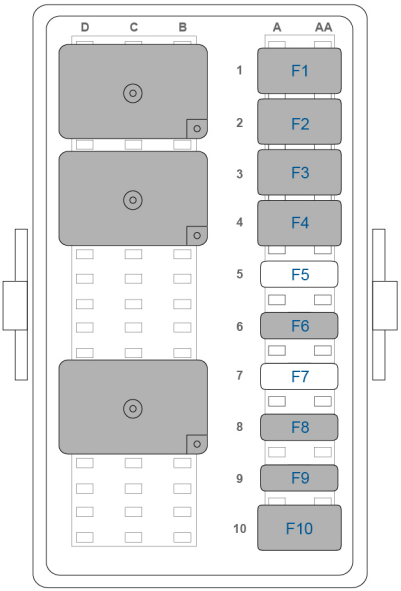

No	Rating	Description
F1	20 A	Left front suspension retract/ deploy
F2	20 A	Right front suspension retract/ deploy
F3	20 A	Left rear suspension retract/ deploy
F4	20 A	Right rear suspension retract/ deploy
F5	-	Not used
F6	15 A	Engine Control Module (ECM), Ignition relay,
F7	-	Not used
F8	20 A	Suspension Control Module (SCM) - Feed 1
F9	20 A	Instrument cluster
F10	30 A	Reverse relay

Fuse Specifications - Fuse Box 2

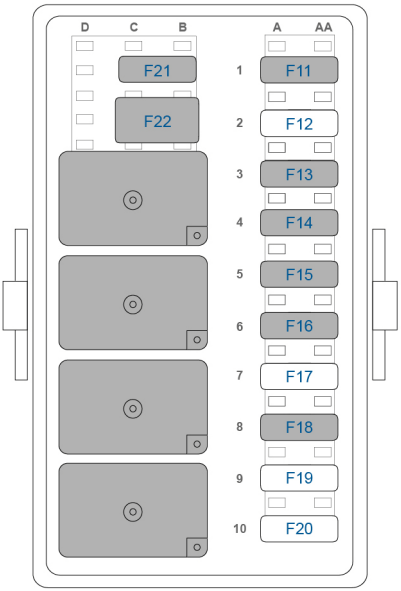

No	Rating	Description
F11	10 A	Suspension Control Module (SCM) key on
F12	-	Not used
F13	10 A	Engine Control Module (ECM) key on
F14	20A	Brake light, Mode control relay
F15	20 A	Ignition relay
F16	20 A	Suspension Control Module (SCM) - Feed 2
F17	-	Not used
F18	10 A	Engine diagnostic connector
F19	-	Not used
F20	-	Not used
F21	20 A	Suspension Control Module (SCM) - Feed 3
F22	30 A	Shifter

Water Intake and Jet Impeller Cleaning

WARNING! Remove engine safety cut-off from switch and allow the jet thrust impeller to stop rotating before removing any foreign object caught in the propulsion system.

Keep away from intake grate while engine is running as Items such as long hair, loose clothing ropes or PFD straps can become entangled in moving parts. The jet impeller runs whenever the engine speed exceeds 2000 rpm in both Land and Marine modes.

Avoid riding through heavy land and marine foliage, as objects can get caught on the intake grate, drive shaft and/or impeller.

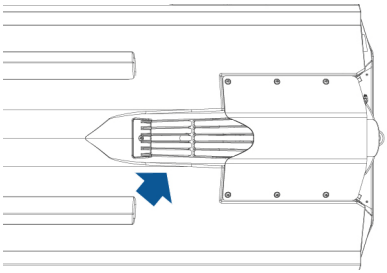

To clear an obstruction:

1. If possible, return the amphibian to land
2. Switch off the engine and remove the engine safety cut-off.
3. Try to clear the obstruction from the intake grate by pulling or cutting away any foreign material.

   Note: If you are unable to remove the foreign material, contact a Gibbs Sports Amphibian dealer.

4. Flush the intake grate with water from a hose to remove any loose debris.
5. Inspect the intake grate and ride plate for signs of damage. Contact a Gibbs Sports Amphibian dealer for repair.

Hull Drain Plugs

In case the water is contaminated, drain the hull into a suitable container and dispose of the container at an authorized waste disposal site.

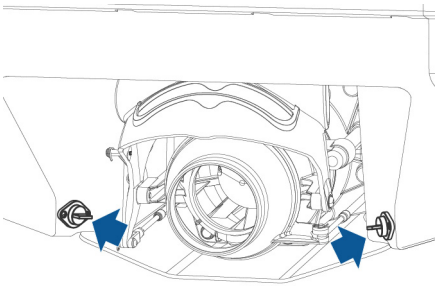

The hull drain plugs allow any water that may have collected in the hull of the amphibian to drain out. When the amphibian is on water, the hull should be sealed with the plugs provided.

Always drain any water from the hull after using the amphibian on water.

1. With the amphibian safely parked on a slight uphill slope, turn off the engine and apply the parking brake(s).
2. Unscrew the drain plugs and allow any accumulated water to drain out.
3. Refit the plugs.

NOTICE If the water shows signs of unusual oil or fuel contamination, please contact a Gibbs Sports Amphibians dealer.

Wheels and Tires

Tire inspection

WARNING! The tires should be regularly checked for wear and to make sure that there are no cuts, bulges or exposure of the ply/cord structure. Do not drive with tires which are worn, damaged or inflated to the incorrect pressure.

WARNING! Do not drive the amphibian with a punctured tire. Even if the punctured tire has not deflated, it is unsafe to use as the tire may deflate suddenly at any time

Always consider tire conditions when driving, and regularly inspect the tires for the following:

- Bumps or bulges in the side of the tire or the tread. Replace any tire that has a bump or bulge.
- Cuts, slits, or cracks in the tire. Replace the tire if you can see fabric or cord.
- Nails or other foreign objects embedded in the side of the tire or tread.
- Excessive tread wear.

Note: If you hit a pothole or hard object while riding, stop as soon as you safely can and carefully inspect the tires for damage.

Tire age degradation

Tires degrade over time due to the effects of ultraviolet light, extreme temperatures, high loads, and environmental conditions. It is recommended that tires are replaced every six years, but may require replacement more frequently.

Tire pressures

WARNING! Tire pressures should be checked using an accurate pressure gauge when cold. Improper or uneven tire pressures could cause you lose control of the amphibian increasing your risk of an accident.

Always inflate your tires to the pressure recommended by Gibbs Sports Amphibians even if it is different from the maximum inflation pressure information found on the tire itself. For the correct tire pressures, refer to *Wheels and Tires, page 89*.

The following procedure should be used to check and adjust tire pressures:

1. Remove the cap from the valve, then firmly press the tire gauge onto the valve and measure the pressure.
2. If required add air to reach the required pressure.
3. If too much air is added, air can be released by pushing on the metal stem in the center of the valve.
4. Recheck the pressure with the tire gauge and adjust if necessary.
5. Refit the valve cap.

Replacement wheels and tires

WARNING! Only install wheels and tires that match the original specification. The installation of different wheels or tires may cause you to lose control of the amphibian.

WARNING! Traction will be seriously impaired if directional tires are incorrectly installed.

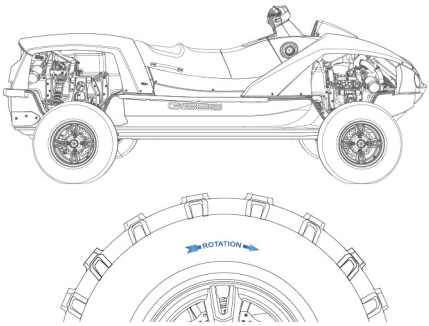

Your amphibian is fitted with directional tires. An arrow on the tire wall shows the direction of rotation. These tires must be fitted to rotate in the direction of the arrow when the vehicle is moving forward.

For the specification of the original wheels and tires installed on the amphibian, refer to *Wheels and Tires, page 89*.

NOTICE The installation of wheels or tires different from the original specification may prevent the suspension from being able to retract to its fully folded position.

Cleaning

It is illegal to pollute drains, streams, rivers and waterways of any description. Always take precautions to prevent spillage of fluids while cleaning. Dispose of used toxic chemicals at authorized waste disposal sites only.

Salt water corrosion prevention

After leaving the water, it is important to thoroughly wash the superstructure and underside (body and hull), paying particular attention to the wheel arches, suspension components, water jet and wheel assemblies.

Washing the amphibian

NOTICE Do not use powered jets of water or pressure washers to clean the amphibian - damage to components could result.

NOTICE Avoid aiming jets of water directly at instruments and other electrical components.

Use liberal amounts of water to flush grit and grime from the body before washing (dried bird droppings and other stubborn deposits should be soaked for several minutes until soft and then flushed away).

Wash the bodywork and hull (superstructure and underside) with cold or lukewarm, fresh water and a wash-and-wax soap. Rinse with clean water after washing, then wipe dry with a cloth to eliminate smears.

Note: Avoid washing the amphibian in direct sunlight. Do not use hot water, dish soap or detergent cleaning products.

Cleaning the instrument panel

Clean the instrument panel using a damp cloth/ cleaning wipe. Do not use cleaning compounds or solutions.

Polishing the bodywork/hull

To preserve the cosmetic appearance of the bodywork and hull, occasionally apply a good-quality polish to the surface.

A good polish should contain a very mild abrasive that will remove surface contamination without damaging the surface, a mild filling compound to reduce the appearance of scratching, and wax to provide a barrier between the cleaned bodywork surface and airborne contaminants.

Do not use cutting paste, color restoration compounds, or polishes containing a harsh abrasive. These will scour the resin surface of the bodywork and may cause permanent degradation of the bodywork.

Damage and rectification

Regularly inspect the bodywork and hull for damage. Any stone chips, fractures or deep scratches should be repaired promptly.

Repairs to bodywork and hull should only be carried out by a repairer approved by the manufacturers. Contact a Gibbs Sports Amphibians dealer for advice.

Storage

When storing the Quadski for an extended period of time or seasonal, the following is recommended:

- Fill the fuel tank with fuel and mix in a fuel stabilizer; run engine for 3-5 minutes
- Change engine oil and filter.
- Remove battery and store in a warm dry location
- Periodically re-charge the battery or leave on a trickle charger.
- Drain any excess water from the hull. See *Hull Drain Plugs, page 77*.
- Clean the amphibian. See *Cleaning, page 79*.
- If possible, periodically move vehicle to rotate tires to avoid flat spots.

NOTICE If the Quadski is being stored in an unheated area and the ambient air temperature is likely to fall below 32°F (0°C), the Quadski must be emptied of raw water to prevent damage to the cooling system. See *Removing Raw Water From The Quadski, page 81*.

Removing Raw Water From The Quadski

WARNING! Remove the engine safety cut-off to prevent the engine from running and apply the parking brake to prevent the amphibian from moving unexpectedly.

The Quadski uses raw water heat exchangers to cool the engine oil and coolant when operating in marine mode. If you are planning to use the Quadski on land, or store the Quadski in an unheated area, and the ambient air temperature is likely to fall below 32°F (0°C), these heat exchangers must be emptied of raw water to prevent damage to the cooling system.

Note: The following items are required for this procedure:

- *A remote fluid pump connected to a hose with an outside diameter of 5/8 in (15 mm) and at least 3.5 ft (1 m) in length.*
- *A suitable size bucket that the fluid pump can be submerged into with at least 1 gallon of antifreeze.*
- *A wide two gallon drain pan.*
- *One gallon of an environmentally friendly antifreeze.*

The easiest way to remove the raw water from the cooling system is to replace it with antifreeze as follows:

1. Fill the bucket with an environmentally friendly antifreeze and lower the pump below the surface of the fluid.

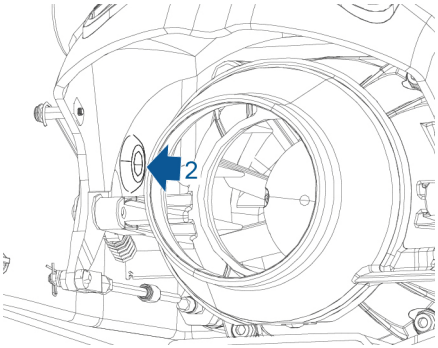

2. Connect the hose from the pump to the raw water output port on the hull.
3. Position the drain pan under the jet nozzle.
4. Turn the pump ‘On’.

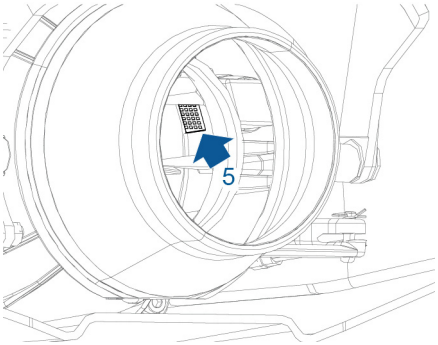

5. Run the pump until antifreeze flows out of jet nozzle inlet screen (located on the inside the jet nozzle).
6. Disconnect the hose pump from the hull and allow any antifreeze to drain out of the system.
7. Remove the drain pan and clean any antifreeze from the hull and jet nozzle.

Note: The next time the Quadski is used on water, raw water will flush the antifreeze from the system. If you subsequently plan on storing the Quadski, or using it on land during cold weather, this procedure will need to be repeated.

Transporting

NOTICE Towing the amphibian with the wheels on the ground may cause serious damage to the amphibians engine and drive train.

The only approved method of transporting your amphibian is using a flatbed trailer.

Damage caused by any other means of transportation may void the limited warranty.

Securing the amphibian to a trailer

Always use a trailer that is suitable for the size of the amphibian. Position the amphibian so that all wheels are completely on trailer and apply the parking brake.

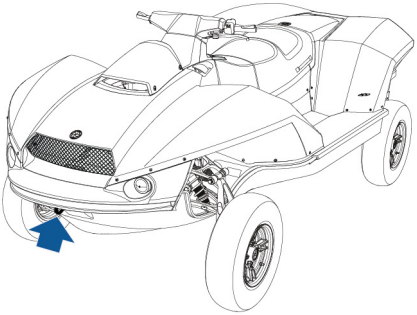

Secure the front of the amphibian using a ratcheting type tie-down strap attached to the front eyelet.

NOTICE Do not over tighten the tie-down strap. Excessive force used to secure the amphibian could damage the front eyelet or hull.

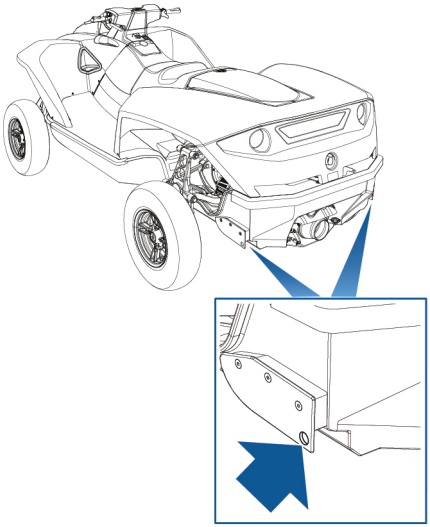

The rear of the amphibian should be secured using a ratcheting type tie-down strap attached to each rear sponson plate.

NOTICE These are the only approved positions for attaching tie-down straps to the amphibian. Attaching straps to the chassis, suspension or other parts of the body can damage the amphibian.

To avoid damage:

- Ensure that metal parts on tie-down straps do not contact the amphibians painted surfaces or the face of any wheels.
- Do not place straps over or through the amphibian's body panels.

Amphibian Identification Numbers

If you need to communicate with a Gibbs Sports Amphibians dealer you may be asked for one of its identification numbers.

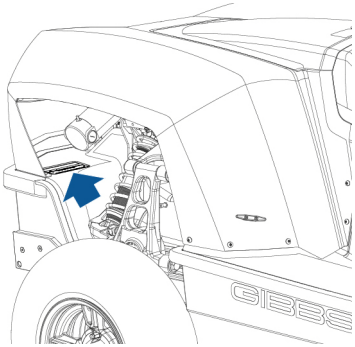

You can find the identification numbers stamped on a plate which is located on the hull in the right rear wheel well.

The plate shows two identification numbers:

- HIN (Hull Identification Number)
- PIN (Product Identification Number)

Engine Identification Number (EIN)

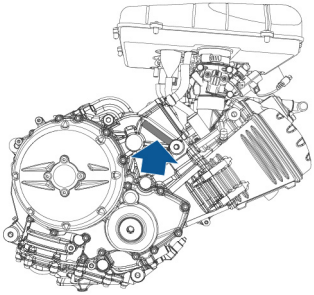

The identification number is located on the right side of the engine below the air intake box.

Emissions Control Information

GIBBS SPORTS AMPHIBIANS INC.

EMISSION CONTROL INFORMATION

ENGINE FAMILY:	EGTLM01.3AA1
EVAPORATIVE EMISSION FAMILY:	EGTLPVSSLAA1 & EGTLPVSSLAA2
EXHAUST EMISSION CONTROL SYSTEM:	MFI, HO2S, PAIR

THIS MARINE ENGINE COMPLIES WITH US EPA AND CALIFORNIA REGULATIONS FOR 2014 MODEL YEAR.

ENGINE POWER: 105 kW	DISPLACEMENT: 1.293 liters	FUEL: UNLEADED PREMIUM GASOLINE
SPARK PLUG: NGK KR9CI	SPARK PLUG GAP (mm) 0.8	VALVE LASH (mm) In 020-0.25
		(ENGINE COLD) Ex 030-0.40

02-09-00074-AB

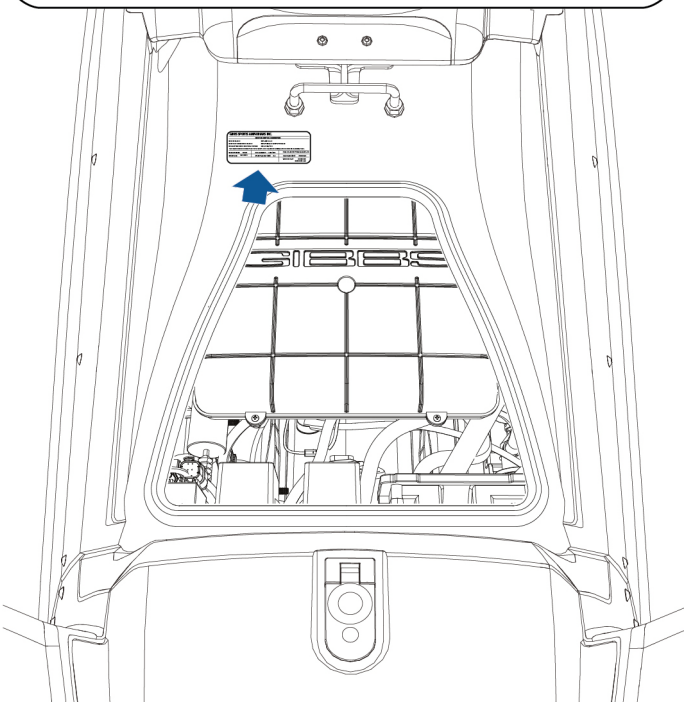

Always refer to the actual label located on the amphibian

The amphibians emissions control information label is located on the upper body panel beneath the seat. Remove the seat to view the label, see *Seat, page 68*.

Dimensions - On Land

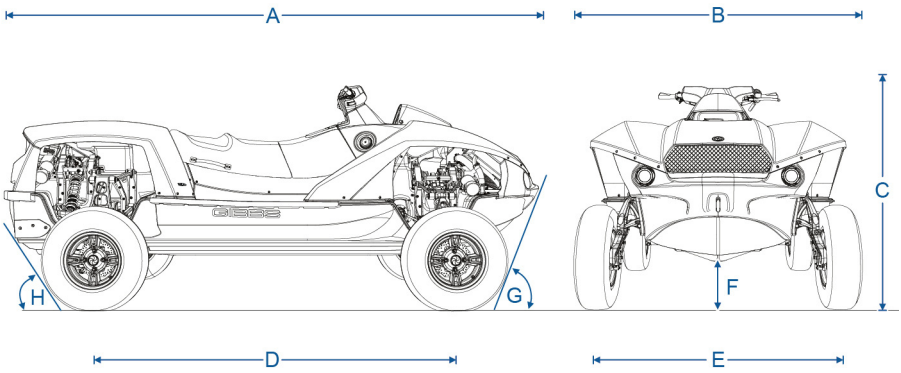

A	Overall length	3 560 mm	140.16 in
B	Overall width	1 587 mm	62.5 in
C	Overall height	1 345 mm	53.0 in
D	Wheel base	2 090 mm	82.3 in
E	Track width	1 410 mm	55.5 in
F	Ground clearance	215 mm	8.5 in
G	Approach angle	45°	
H	Departure angle	26°	

Dimensions - On Water

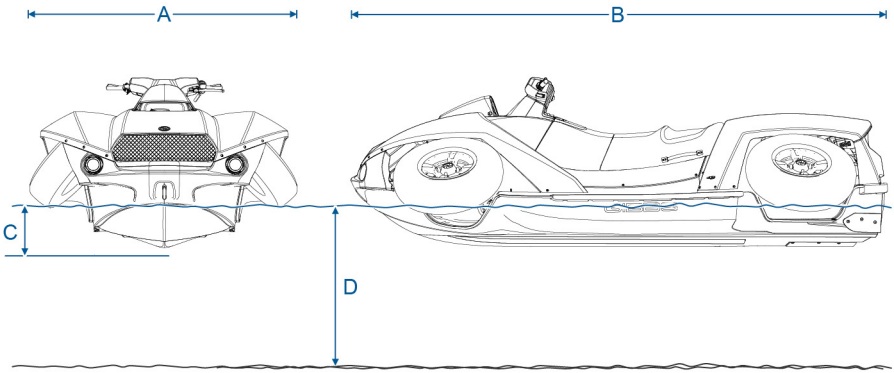

A	Beam (maximum)	1 842 mm	72.50 in
B	Length	3 560 mm	140.16 in
C	Maximum draft (fully laden)	352 mm	13.85 in
D	Recommended minimum depth of water to deploy and retract wheels	1000 mm	3.28 ft

Engine

Type	BMW K1300 Water-cooled 4-stroke in-line four-cylinder engine, two overhead camshafts, four valves per cylinder
Capacity	1293 cc
Bore	80.0 mm
Stroke	64.3 mm
Firing order	1-3-4-2
Compression ratio	13:1
Performance figures: Engine maximum power Engine maximum torque Maximum continuous engine speed	 105 kW (140 HP) 118 Nm 8500 rpm
Lubrication system	Dry Sump
Lubrication pressure (at idle)	Approx. 0.5 bar at hot idle
Fuel	98 RON, Premium plus unleaded 95 RON, Premium unleaded (fuel grade, usable with power- and consumption-related restrictions)

Engine Management System

Type	Computerized Sequential Ignition and Fuel Injection, Closed Loop
Induction system	Individual Throttle Body with Intake Silencer and Flame Arrestor
Air filter	Replaceable Element Type
Spark plugs	NGK KR9CI
Spark plug gap	0.80 mm
Fuel pressure	3.5 bar
Fuel pump	In tank, electric, submersible

Transmission

Type	Sequential, Electronically controlled with centrifugal clutch
Gears	5 forward, 1 electrically operated reverse gear
Gear ratios:	
Primary	1.559
First	1.789
Second	1.458
Third	1.240
Fourth	1.094
Fifth	0.971
Final drive ratio	6.36

Jet Thrust Drive

Type	Single stage mixed flow
Impeller	Stainless steel 5 blade
Stator	11 blade cast Aluminum
Jet reduction ratio	2.07

Electrical

System	12 volt, negative earth
Battery:	
Type	Deka ETX30LA
Capacity	26 Ampere Hour
Cold-Cranking Amperage (CCA)	400 amps
Alternator:	
Type	Bosch ELH01566
Output	55 amps

Wheels and Tires

Wheel size	6.5J x 12	
Tires Front Rear	 25 x 8.00 - 12 25 x 8.00 - 12	
Tire pressures - all riding conditions Front Rear	 69 kPa / 0.69 bar 69 kPa / 0.69 bar	 10 PSI 10 PSI
Tire maximum load rating	225 kg	500 lb
Wheel nut torque	40 Nm	30 lbf.ft

Weights

Unladen weight*	652 kg	1 437 lb
Maximum laden weight	837 kg	1 845lb
Maximum number of riders	2	
Maximum weight of rider	175 kg	385 lb
Maximum weight of cargo	10 kg	22 lb
* The unladen weight is inclusive of a full fuel tank and all fluids.		

Approved Fluids and Capacities

Fluid	Specification	Capacity
Engine oil	Castrol Power RS Racing 4T 10W-40.	4.39 liters (4.64 qt)
Brake fluid	Use any proprietary brand of brake fluid meeting DOT 4 specification.	700 ml (24 oz)
Coolant	50/50 mix of Prestone Extended Life Antifreeze (CAT EC-1) and clean drinkable water - preferably distilled water.	11.33 liters (2.99 gallons)
Synchronizer / Differential	Mobil 1 Synthetic Gear Lube LS 75W-90.	750 ml (25.36 oz)
General greasing	Use a multi-purpose marine grease.	-

A

Accessories 6
Air filter 63
Anchoring 51
Antifreeze 66
Approved fluids and capacities 90
Ascending a slope 39
Attention symbols 3
ATV training course 4

B

Battery 73
  Specification 88
Beaching 54
Before you ride 33
Boating training course 4
Brake fluid level 67
Brake lever 19
Braking 38
Break-In guidelines 27

C

California specific information
  Proposition 65 6
Capsize information 55
Carbon Monoxide Poisoning 6
Cargo 32
Carrying passengers 5, 31
Charging the battery 74
Cleaning 79
  Polishing the body 80
  Washing the body 79
Clothing 29
Cold weather 31
Cold weather use 31
Controls - overview 14
Coolant level 66

D

Deploying the wheels 46
Descending a slope 40
Dimensions
  On land 85
  On water 86
Display 21
Drain plugs 77

E

Emission control system
  Label 84
  Maintenance 60
Engine cover removal 69
Engine data 87
Engine oil level 65
Engine running - first 10 hours 27
Engine safety cut-off 17
Engine starting 16
Engine stop 17
Entering the water 45
Exhaust spark arrestor 71
Exiting the water 46
Exterior cleaning 79

F

Fire extinguisher 25
Flag 26
Fluid specifications 90
Front eyelet 26
Fuel 13
Fuel gauge 21
Fuel handling and safety 12
Fuel specification 12, 87
Fuel tank capacity 12
Fuse box 75
Fuses 76

G

Gears 18
Give way zone - on water 56
Glasses 29
Ground clearance 41, 85

H

Handlebars 15
Headlights 24
Helmet 29
Hilly terrain 38
Hour meter 21
Hull drain plugs 77
Hull Identification Number 83
Hypothermia 31

I

Ice 31
Identification number
  Engine number 83
  Hull 83
Ignition switch 15
Indicator lights 22
Instruments 21

J

Jet drive
  Specifications 88
Jet impeller cleaning 77
Jet nozzle 15

L

Labels (affixed to amphibian) 7
Lanyard 16, 55
Life jacket 29
Light switch 24
Lights 24
Limits of use (on water) 51
Load limits 32
Lowering the wheels 23, 46

M

Maintenance
  Air filter 63
  Approved fluids 90
  Battery 73
  Brake fluid 67
  Component locations 62
  Coolant 66
  Emission control system 60
  Engine oil 65
  Exhaust spark arrestor 71
  Fuel system 60
  Safety 60
  Seat 68
  Service schedule 61
  Spark plugs 70
  Upper body panel 69
Marine Enhanced Steering (MES) 49
Modifications 6
Mooring 53

N

Navigation aids 57
Navigation rules 56
Night time operation 51

O

Obstacles 41
Operator
  Ability 4
  Age 4
  Training 4
Overtaking on water 57
Owner maintenance 59

P

Parking 42
Parking brake 20
Passing on water 57
Paved roads 28
Paved surfaces 28, 37
Personal Flotation Device (PFD) 29
Polishing 80
Port 56
Post operation 58
Practice exercises on water 52
Prepared trails 36
Pre-ride inspection 33
Protective gear
  Recommended 30
  Required 29
Public roads 37

R

Raising the wheels 23, 45
Reboarding 51
Recovering the amphibian
  On land 43
  On water 54
Recovery eye 26
Refuelling 13
Replacing a fuse 75
Retracting the wheels 45
Reversing
  On land 18, 42
  On water 19, 50
Riding position 38, 47
Rough terrain 41

S

Safety equipment
- Recommended 30
- Required 30

Safety labels 7
Salt water cleaning 79
Sand dunes 38
Scheduled maintenance 59, 61
Seat 68
Shallow water 38, 50
Signal word definitions 3
Slippery surfaces 37
Spark plug
- Removal 70
- Specification 87

Speedometer 21
Stalling on a slope 40
Starboard 56
Starter switch 15
Starting the engine 16
Steep slopes 39
Steering lock 15
Stopping on water 49
Stopping the engine 17
Storage compartment
- Front 25
- Rear 25

Stunts 42
Suitable water entry and exit points 44
Suspension
- Deploy 23
- Fault 23
- Retract 23

T

Technical data
- Electrical 88
- Engine 87
- Engine management system 87
- Jet drive 88
- Transmission 88
- Weights 89
- Wheels and tires 89

Throttle 17
Tie down points 82
Tires
- Degradation 78
- Directional tires 79
- Inspection 78
- Pressures 78, 89
- Replacing 79
- Specification 89

Towing 42, 51
- For recovery 43, 54

Transmission
- Specification 88

Transporting the amphibian 82
Traversing a slope 41
Trip planning 28
Turning
- On land 39
- On water 48

Turning on a slope 41

U

Unfamiliar terrain 36
Upper body panel removal 69
Used engine oil 60, 65
Using at night 51

W

Warning labels 7
Warning lights 22
Water entry sites 44
Water intake cleaning 77
Weights 89
What to wear 29
Wheel replacement 79
Wheel specification 89

ON LAND

⚠ WARNING

Improper use can result in SEVERE INJURY or DEATH

ALWAYS USE AN APPROVED HELMET AND PROTECTIVE GEAR FOR DRIVER AND PASSENGER

NEVER USE ON PUBLIC ROADS

NEVER CARRY MORE THAN 1 PASSENGER

NEVER USE WITH DRUGS OR ALCOHOL

NEVER operate:

- without proper ATV training or instruction
- at speeds too fast for your skills or the conditions
- on public roads - a collision can occur with another vehicle
- with a passenger unless passenger seat is securly in place.

THE OPERATOR MUST ALWAYS:

- use proper riding techniques to avoid vehicle overturns on hills and rough terrain and in turns
- avoid paved surfaces - pavement may seriously affect handing and control
- reduce speed and use extra caution at all times when carrying a passenger - dismount passenger when conditions require
- make sure passenger reads and understands this label and passenger safety label

LOCATE AND READ OPERATOR'S MANUAL.
FOLLOW ALL INSTRUCTIONS AND WARNINGS.

03-12-00124-AA (April 2014)